en

Operator's Manual
Maxi-Air™
Towable Compressor
Models MA375-DP T4F, MA400 T4F

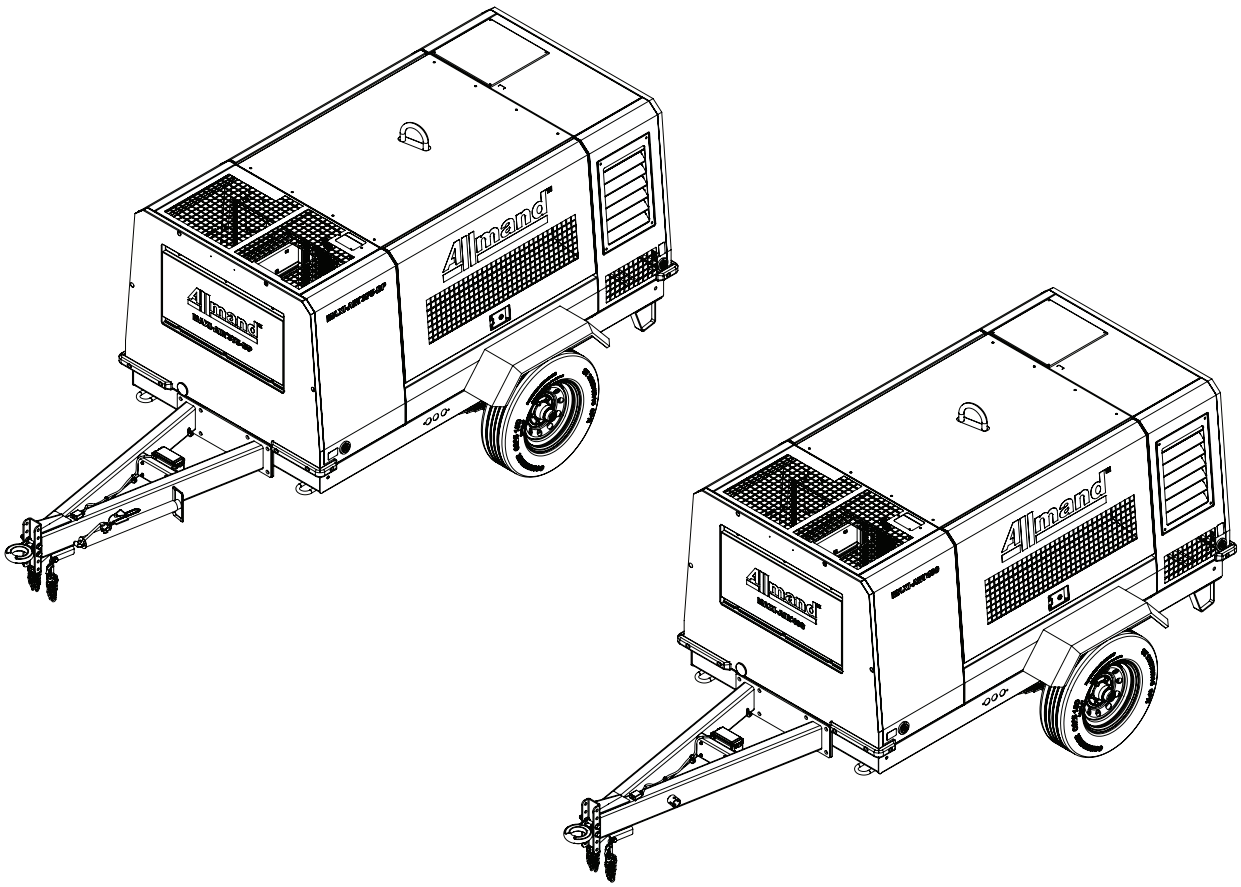

116028
Revision B

Thank you for purchasing this quality-built Allmand™ towable compressor. We are pleased that you've placed your confidence in the Allmand brand. When operated and maintained according to the instructions in this manual, your Allmand compressor will provide many years of dependable service.

This manual contains safety information to make you aware of the hazards and risks associated with towable compressors and how to avoid them. Because Allmand does not necessarily know all the applications this towable compressor could be used for, it is important that you read and understand these instructions thoroughly before attempting to start or operate this equipment. **Save these original instructions for future reference.**

Where to Find Us

If you have any questions about the machine, contact your authorized dealer. You can also contact Allmand Customer Service by phone at **(800) 562-1373**, or on the Internet at **allmand.com**.

Knowing the model number of your Allmand towable compressor will make it easy to order maintenance or repair parts either online or from your local dealer. The model number is generally a number stamped into metal or on a sticker directly on your product.

Towable Compressor

Model Number _____

Revision _____

Serial Number _____

Date Purchased _____

Engine

Model Number _____

Type Number _____

Code Number _____

Table of Contents

Operator Safety

This section explains safety cautions for safety work for operation, inspection, maintenance, installation, movement and transportation. Read these safety requirements carefully and fully understand the contents before starting the machine.

For your better understanding of the precautions in this manual and on this machine, safety precautions are classified into “DANGER”, “WARNING” and “CAUTION” message with a warning symbol ⚠ marked, according to the degree of hazards.

When one of these messages is found, please take preventative safety measures and carry out “SAFETY OPERATION AND PROPER MAINTENANCE OF THE MACHINE”.

⚠ DANGER	DANGER indicates an imminently hazardous situation which, if not avoided, will result in death or serious injury.
⚠ WARNING	WARNING indicates a potentially hazardous situation which, if not avoided, could result in death or serious injury.
⚠ CAUTION	CAUTION indicates a potentially hazardous situation which, if not avoided, may result in minor or moderate injury. It may also be used to alert against unsafe practices.
IMPORTANT	IMPORTANT indicates important messages for the performance or durability of the machine, but will not result in injury.

This manual does not describe all safety items. We, therefore, advise you to pay special attention to all items (even though they may not be described in the manual) for your safety.

PROPOSITION 65 WARNING

⚠ WARNING

Breathing diesel engine exhaust exposes you to chemicals known to the State of California to cause cancer and birth defects or other reproductive harm.

- Always start and operate the engine in a well-ventilated area.
- If in an enclosed area, vent the exhaust system to the outside.
- Do not modify or tamper with the exhaust system.
- Do not idle the engine except as necessary

For more information, go to www.P65warnings.ca.gov/diesel

Please indicate the MODEL / SER.No. on the plate of the machine when making inquiries.

A plate stamped with the model and serial number is attached to the side of the machine.

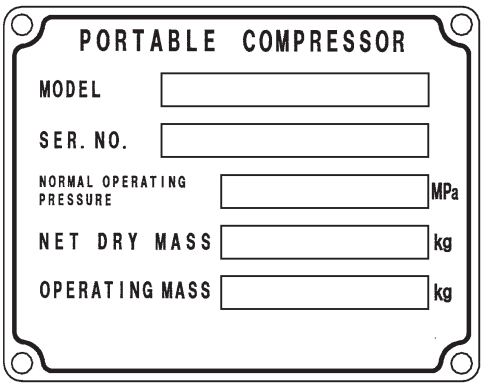

A130375

A VIN plate is also located on the left side of the machine.

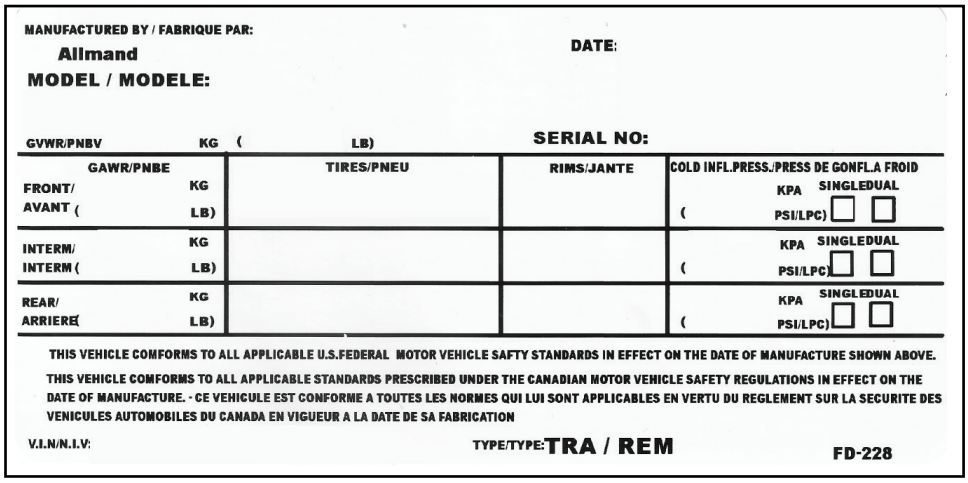

MANUFACTURED BY / FABRIQUE PAR:
Allmand
MODEL / MODELE:
DATE:
GVWR/PNBV KG (LB)
SERIAL NO:

GAWR/PNBE	TIRES/PNEU	RIMS/JANTE	COLD INFL.PRESS./PRESS DE GONFL.A FROID
FRONT/ AVANT (KG LB)			KPA (PSI/LPC) SINGLE ☐ DUAL ☐
INTERM/ INTERM (KG LB)			KPA (PSI/LPC) SINGLE ☐ DUAL ☐
REAR/ ARRIERE(KG LB)			KPA (PSI/LPC) SINGLE ☐ DUAL ☐

THIS VEHICLE COMFORMS TO ALL APPLICABLE U.S.FEDERAL MOTOR VEHICLE SAFTY STANDARDS IN EFFECT ON THE DATE OF MANUFACTURE SHOWN ABOVE.

THIS VEHICLE COMFORMS TO ALL APPLICABLE STANDARDS PRESCRIBED UNDER THE CANADIAN MOTOR VEHICLE SAFETY REGULATIONS IN EFFECT ON THE DATE OF MANUFACTURE. - CE VEHICULE EST CONFORME A TOUTES LES NORMES QUI LUI SONT APPLICABLES EN VERTU DU REGLEMENT SUR LA SECURITE DES VENICULES AUTOMOBILES DU CANADA EN VIGUEUR A LA DATE DE SA FABRICATION

V.I.N/N.I.V:
TYPE/TYPE: TRA / REM
FD-228

Safety Warning Labels

The following safety warning labels are attached to the machine. If damaged or missing, contact your dealer for replacements.

A

B

C

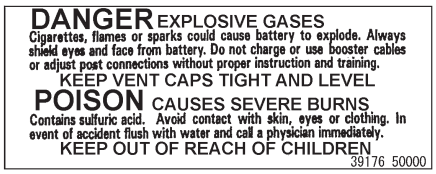

D

E

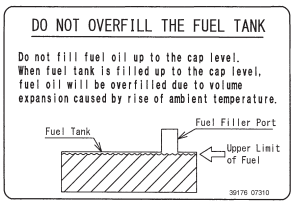

E1

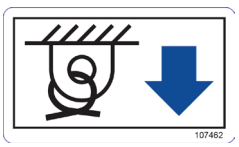

F

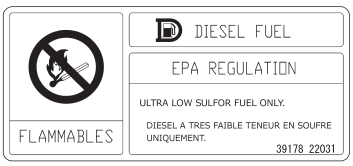

G

H

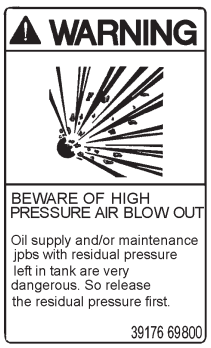

I

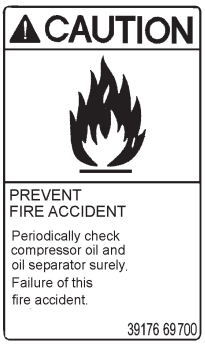

J

K

L

M

N

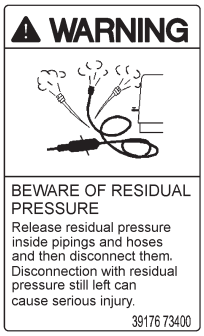

O

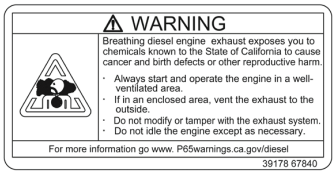

P

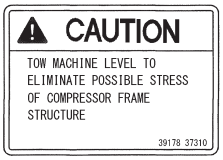

Q

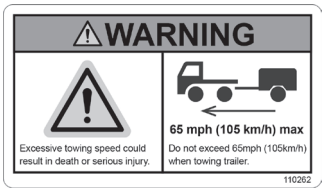

R

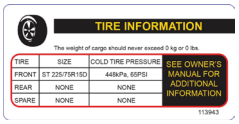

Location of safety warning labels

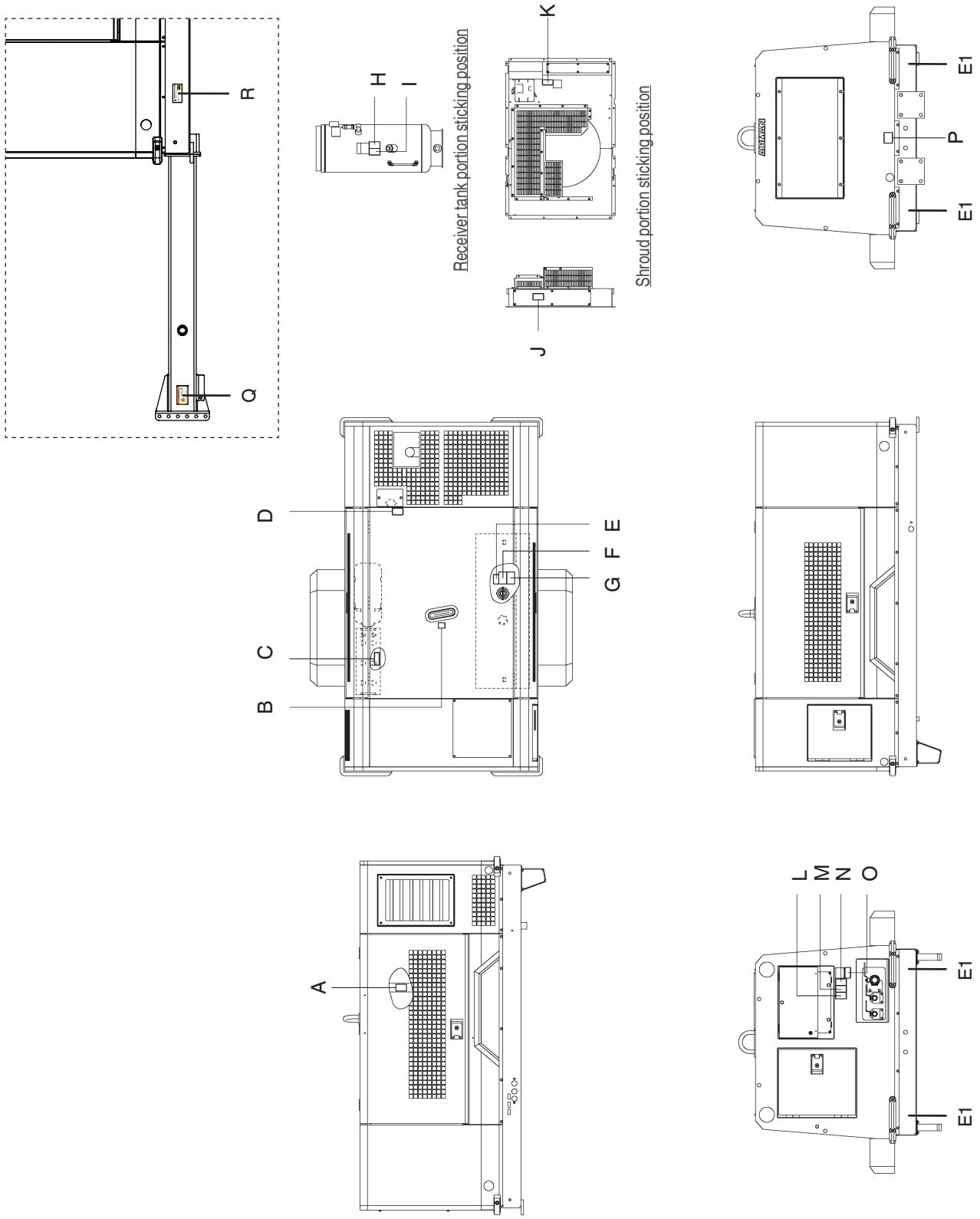

DANGER

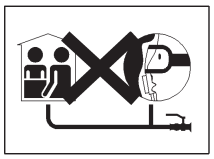

TR0201-1

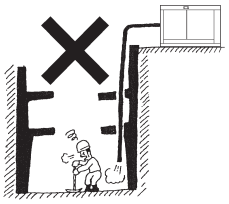

A080001

- Compressed air from this machine contains poisonous materials. Absorption of the compressed air can cause serious injury. Never provide this compressed air for human respiration.
- This machine is not designed to be used for working chambers pressurized by compressed air such as respiratory air provided to persons working inside wells and tunnels such as pneumatic engineering method and pneumatic caisson method. Should this machine stop operation due to trouble, it can cause death and serous injury to the working persons. Refrain from using the compressed air for such pneumatic engineering method or pneumatic caisson method.

WARNING

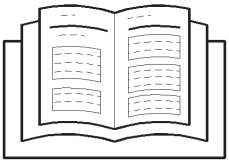

TR0086

- Read each instruction plate which is displayed in the manual or on the machine carefully, understand its content and follow the indications thereof.
- Do not modify the machine without prior approval. The safety may be compromised, functions may be deteriorated, or the machine life may be shortened.
- Never use the machine for the purpose of compression of gases other than air, or as a vacuum pump. Otherwise, serious accidents may occur.

TR0092

- Never blow compressed air directly at people. Scattered impurities, dust, or foreign objects in the compressed air may cause skin and eyes to be seriously injured.
- As compressed air contains toxic gas etc., compressed air should not be used to be blown or sprayed against food etc.

TR0304

- Keep hands off from the rotating portion or belts while running. It could cause serious injuries if hands should be caught in.

W011

- As part of pre-start safety checks, always confirm that there is no residual pressure in the tank by carefully opening the service valve, even if the pressure gauge on the screen indicates 0PSI.
- Note residual pressure in the separator receiver tank could force both extremely hot compressed air and oil to jet out and you may be scalded or seriously injured.

WARNING

M003

- When cleaning dust accumulated in such devices as the air-filter, by blowing compressed air, wear safety glasses, etc. to protect your eyes.

CAUTION

H990432

- Be sure to stop the engine, and let the coolant water sufficiently cool down before draining it.
- If the drain valve is opened before the coolant water is cooled enough, hot water could jet out, and it could cause scalding.

W004-1

- Be sure to perform the periodic checks of compressor oil and oil separator.
- Neglecting checks could cause overheat of the oil, resulting in a fire.

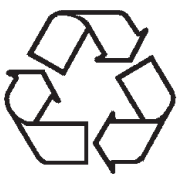

A100285

- Waste liquid from the machine contains harmful material. Do not discharge it onto the ground or into the river, lake or sea. Such material will contaminate the environment.
- Be sure to use a container to hold the waste liquid from the machine.
- Be sure to follow the designated regulations when disposing of oil, fuel, coolant (antifreeze), filter, battery or other harmful materials.

- The engine of this machine and electrical parts many electronic devices have been installed. If you perform welding work, remove the connector of the electronic control equipment. Application of excessive current to electronic controls can cause equipment malfunction.

Features and Controls

Internal Components

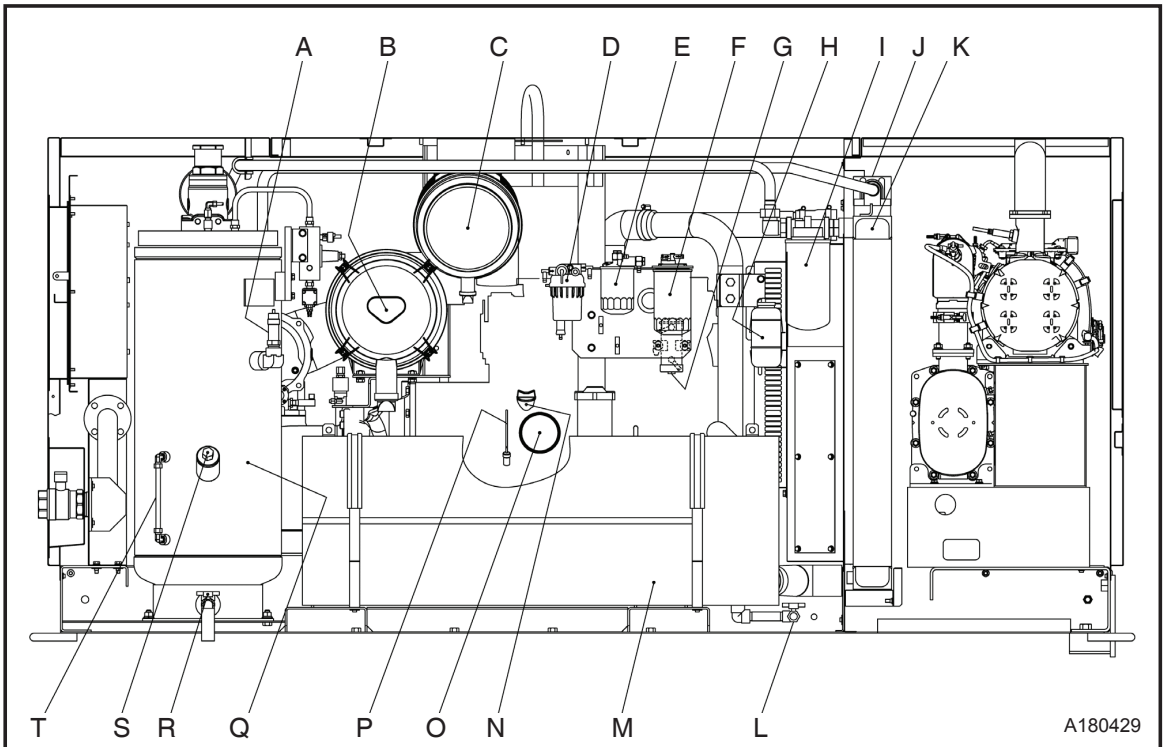

MA400 T4F

No.	Description	Function
A	Safety valve	For releasing compressed air to the atmosphere when the pressure rises higher than the rated pressure in the system.
B	Air filter (For compressor air-end)	Filtering device for filtering dust floating in intake air.
C	Air filter (For engine)	Filtering device for filtering dust floating in intake air.
D	Sedimenter	For separating coolant from fuel in the system.
E	Fuel pre-filter	For removing dust and water mixed in fuel.
F	Fuel filter	For filtering foreign matter and dust mixed in fuel.
G	Fuel air-bleeding electromagnetic pump	For automatically bleeding air from fuel pipes in the system.
H	Reserve tank	For checking coolant level and supplying it.
I	Compressor oil filter	For filtering compressor oil in the system.
J	By-pass valve	For keeping compressor oil at optimum temperature in the system.
K	Oil cooler	For cooling compressor oil in the system.
L	Fuel tank drain valve	For draining condensates from fuel tank.
M	Fuel tank	For storing fuel.
N	Engine oil filler port	For supplying and replenishing engine oil to engine.
O	Engine oil filter	For filtering engine oil in the system.
P	Engine oil level gauge	For checking engine oil level.
Q	Separator receiver tank	For separating air and oil from compressed air in the system.
R	Separator receiver tank drain valve	For draining condensed water from separator receiver tank.
S	Compressor oil filler port	For supplying or adding compressor oil.
T	Compressor oil level gauge	For checking compressor oil level.

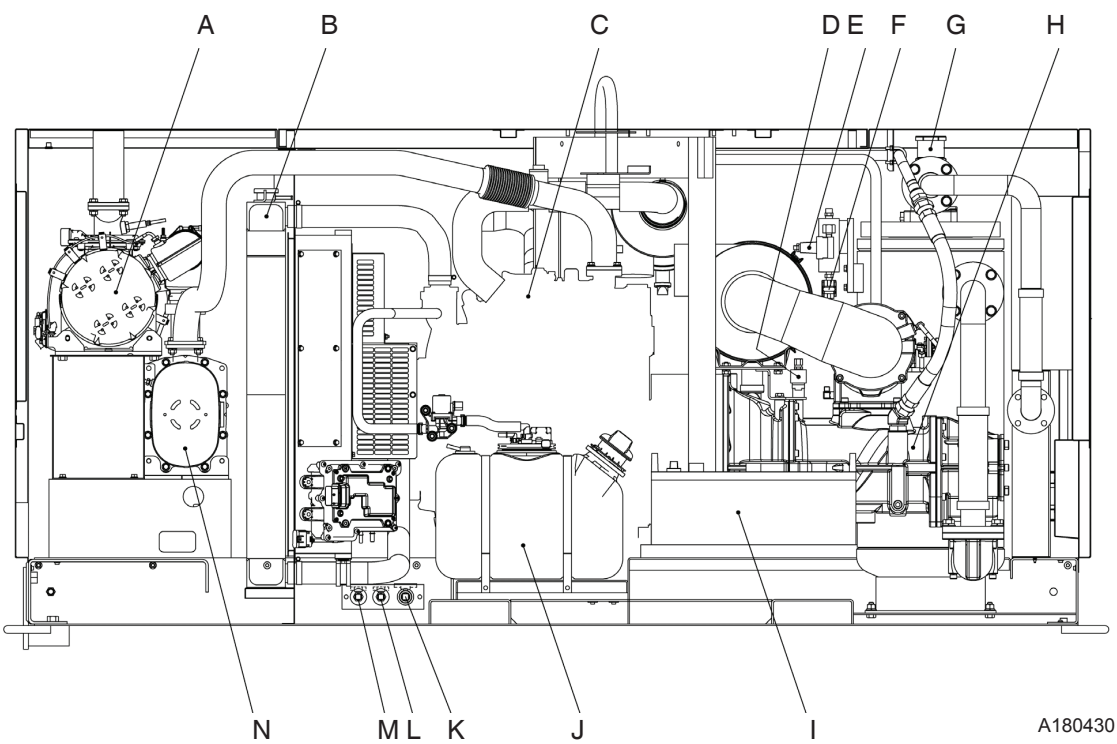

MA400 T4F

No.	Description	Function
A	SCR (Selective Catalytic Reduction)	Selective reduction-type catalyst that uses DEF as a reducing agent.
B	Radiator	For cooling the coolant for engine in the system.
C	Engine	For driving the compressor air-end in the system.
D	Solenoid valve for unloader spring chamber	For reducing loads during start-up.
E	Pressure regulator	For controlling full load and unload operation.
F	Solenoid valve for starting unload	For reducing load at start-up.
G	Pressure control valve	For keeping the pressure in receiver tank constantly higher than a certain level in the system.
H	Compressor air-end	For compressing air in the system.
I	Battery	For electrically starting engine.
J	DEF tank	Container for DEF
K	Engine oil drain valve	For draining engine oil.
L	Oil cooler drain valve	For draining compressor oil from oil cooler and oil line.
M	Radiator drain valve	For draining engine coolant.
N	DPF (Diesel Particulate Filter)	Apparatus for removing harmful components contained in the exhaust gas.

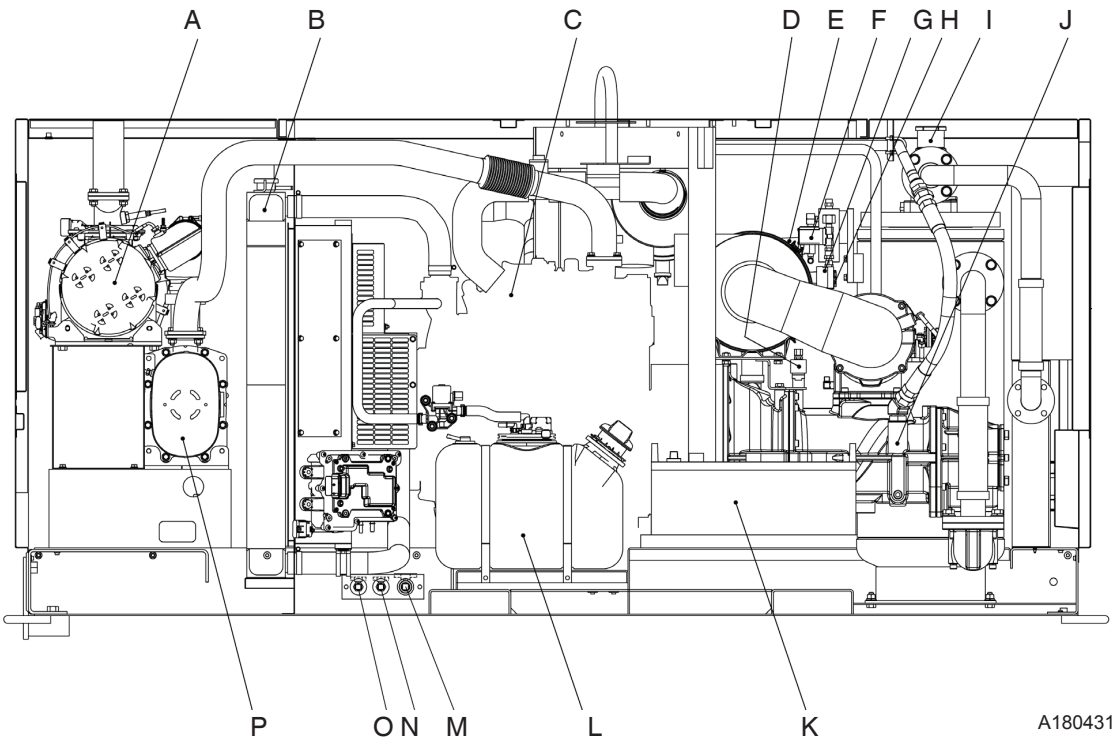

MA375-DP T4F

No.	Description	Function
A	SCR (Selective Catalytic Reduction)	Selective reduction-type catalyst that uses DEF as a reducing agent
B	Radiator	For cooling the coolant for engine in the system
C	Engine	For driving the compressor air-end in the system
D	Solenoid valve for unloader spring chamber	For reducing loads during start-up
E	High pressure regulator	Pressure regulator used to control air pressure during high pressure operation
F	Pressure switching solenoid valve	Equipment for switching the operating pressure between low pressure and high pressure
G	Low pressure regulator	Pressure regulator used to control air pressure during low pressure operation
H	Solenoid valve for starting unload	For reducing load at start-up
I	Pressure control valve	For keeping the pressure in receiver tank constantly higher than a certain level in the system
J	Compressor air-end	For compressing air in the system
K	Battery	For electrically starting engine
L	DEF tank	Container for DEF
M	Engine oil drain valve	For draining engine oil
N	Oil cooler drain valve	For draining compressor oil from oil cooler and oil line
O	Radiator drain valve	For draining engine coolant
P	DPF (Diesel Particulate Filter)	Apparatus for removing harmful components contained in the exhaust gas

After cooler type

Only options available on standard units are shown in the following figure.

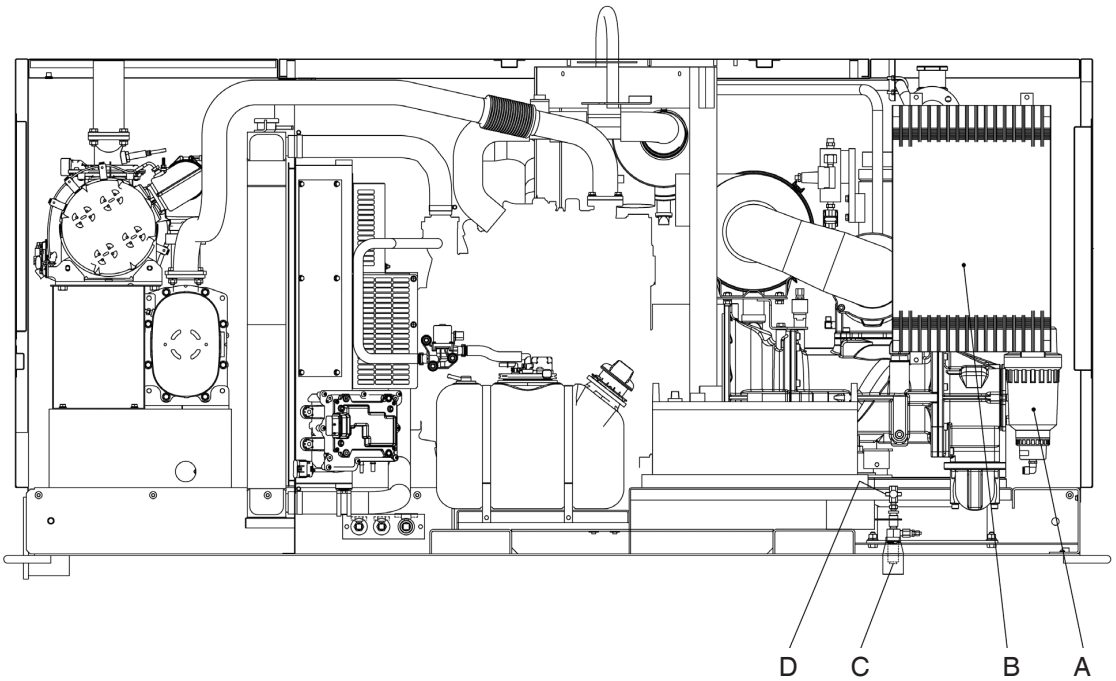

No.	Description	Function
1	Drain separator	For separating water from compressed air cooled through after cooler
2	After cooler	For cooling compressed air
3	Drain port of air pipe	For draining condensate from drain separator
4	Drain warming valve	For preventing freezing of water separated through drain separator when exhausting it

Set-Up and Installation

Transportation

When loading and unloading the machine, make sure to use the lifting bail provided on the center of the machine top.

Lifting

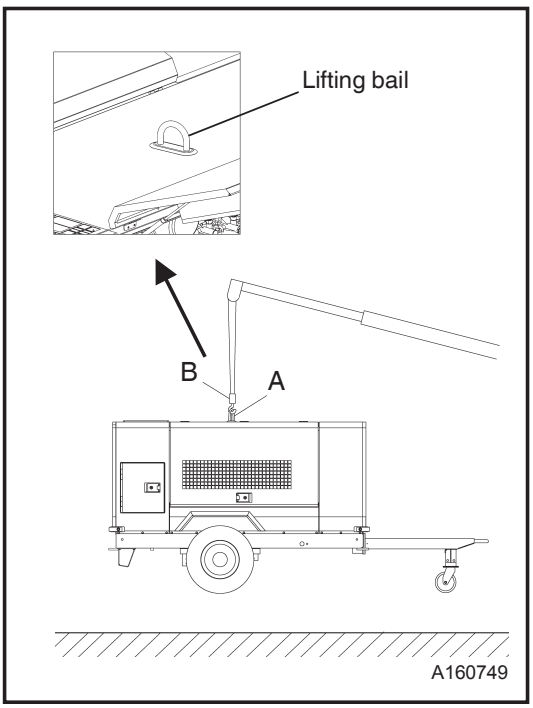

1. Before lifting the machine, make sure to check the lifting bail [A] for any cracks or loosened bolts.
2. Connect the hook [B] of the crane or shackle to the lifting bail eye fitted at the top center of the machine. Make sure there is no person standing around the machine. Then perform the hoisting operation.
3. Select a truck or a crane with a capacity sufficient for the size and weight of the machine. See “Specifications.”
4. Any crane operations must be performed by a qualified crane operator.

Mounting the machine on a truck bed

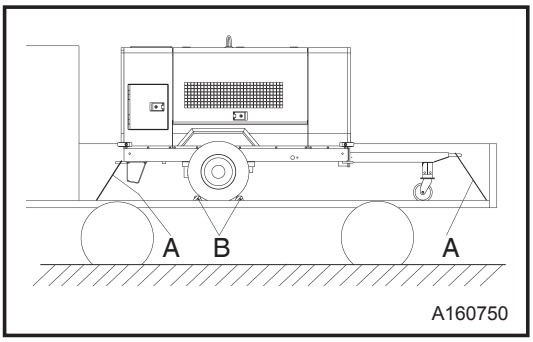

- Fasten the machine with ropes [A] as shown, and securely fix it on the truck bed.
- Place one set of chocks [B] against the wheels.

Transportation warnings

WARNING

- Never stand under the machine when lifted. Death or serious injury could result.
- Lifting the machine while still in operation could result in death or serious injury, or serious equipment damage.

Towing

Warnings for towing the machine

WARNING

- Before towing the machine, make sure to check the following:
- Proper tire pressure.
- Tire lug nuts are not loose.
- Tires are not worn or damaged.
- Make sure that the end of the drawbar is securely connected to the coupler of the towing vehicle, to prevent disconnection while the machine is being towed.
- Make sure there is no damage to the towing vehicle or the drawbar of the machine.
- Make sure to keep your hands away from any part of the coupling device when coupling or uncoupling.
- Make sure to drive the towing vehicle safely. Avoid dangerous situations or conditions on the road.
- Failure to obey the above instructions could result in death or serious injury, or serious equipment damage.

Installation conditions

- The machine must be parked on a firm, level surface.
- The machine must be parked perpendicular (on a right angle) to a slope.
- The machine must not be parked on a slope more than 15°
- The machine should be operated in the following conditions:
- **Ambient temperature---------- -5°F to 104°F (-15℃ to +40℃)**
- **Humidity---------- Less than 80%**
- **Altitude---------- Lower than1,500m above sea level**

  Operating the machine in conditions other than those stated above could result in death or serious injury, or serious equipment damage.
- The machine must be installed in an environment where fresh air is always available. Avoid temperature extremes and excessive humidity.
- If more than two machines are placed together in operation, keep enough distance so that the exhaust from one machine does not affect the other.
- Keep enough space around the machine for inspection and maintenance access.

WARNING

PC002

- Exhaust gas from the engine is poisonous. It could cause death or serious injury if inhaled. Avoid using the machine in an insufficiently ventilated building or tunnel.
- Do not position the exhaust gas outlet in direction of a person or a house.

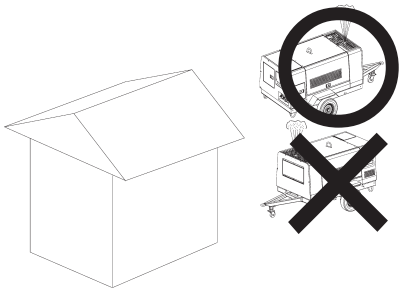

A150836

- Do not position the exhaust gas outlet in the direction of a house.
- Exhaust from the engine is harmful. Avoid positioning it in the direction of passers-by.

Installation notes

WARNING

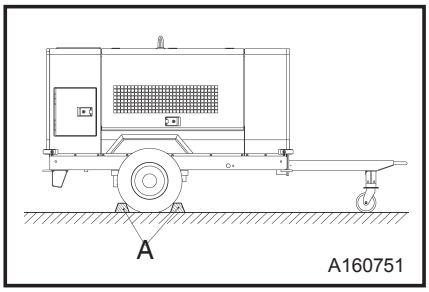

- Make sure to install wheel chocks [A] on both sides of both tires. Failure to do so could result in death or serious injury.

Placing safety fence in position

CAUTION

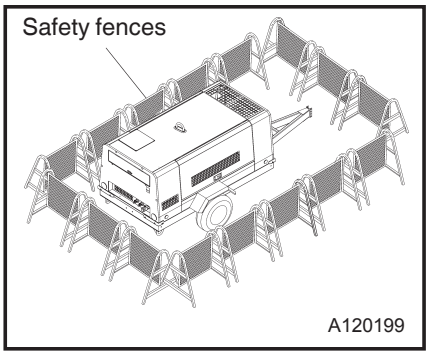

- Make sure to place a safety fence around the machine, to prevent unauthorized access to the machine.

Service valve

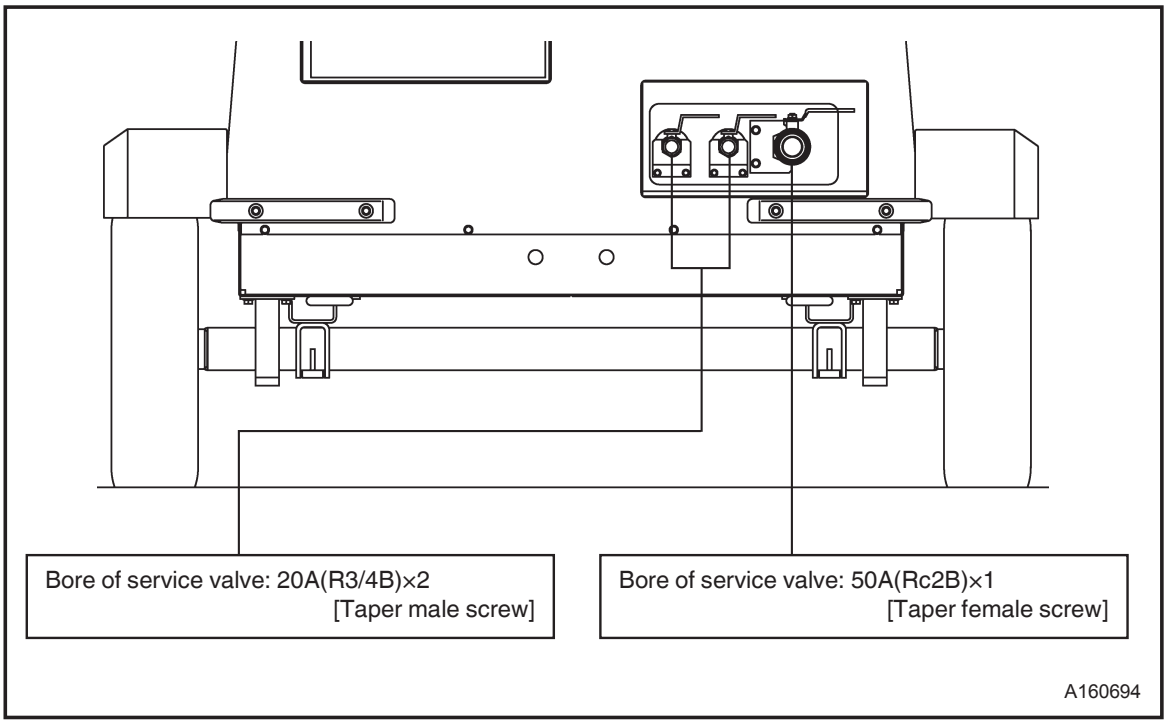

Warnings of hose attachment and removal

WARNING

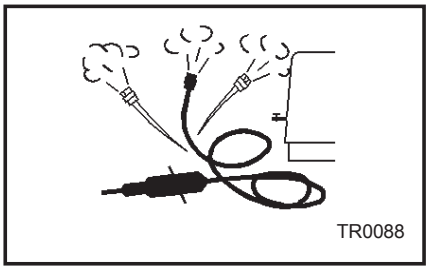

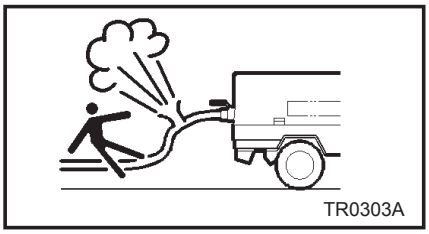

- Piping or air hoses connected to the service valves of this machine must meet or exceed the discharge pressure of the machine.
- Connect piping or air hoses to the service valves of this machine firmly before operation, and check during operation. A loose connection could separate and result in death or serious injury.
- Close the service valves and relieve remaining pressure before removing piping or air hoses. Remaining pressure in the piping or air hoses could result in death or serious injury.
- Read the operator manuals supplied with any tools or equipment used in conjunction with this machine.

Operation with discharge port (compressed air supply port) opened is prohibited

WARNING

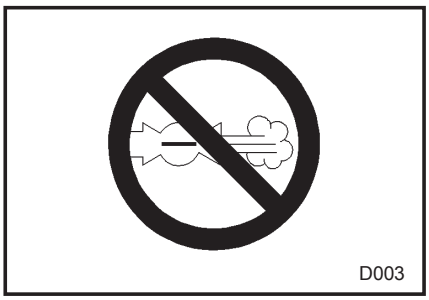

- Do not operate the machine with service valves and relief valve open unless connected to piping or air hoses.
  High-pressurized air directly from the service vales could result in death or serious injury.
- If the machine must be temporarily operated with the valve open, mount a silencer to reduce noise, and wear hearing protection to prevent hearing damage.

Cautions of service valve

CAUTION

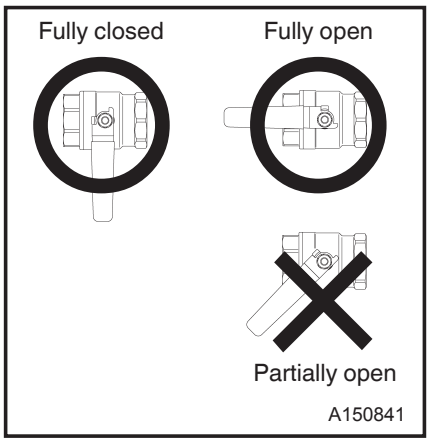

- A partially open service valve could result in equipment damage and air leaks. Make sure the service valve is fully closed or fully open.

Operation

Instrument Panel

Each display of the operation panel is illustrated as follows.
Read and fully understand the explanations and be sure to operate safely:

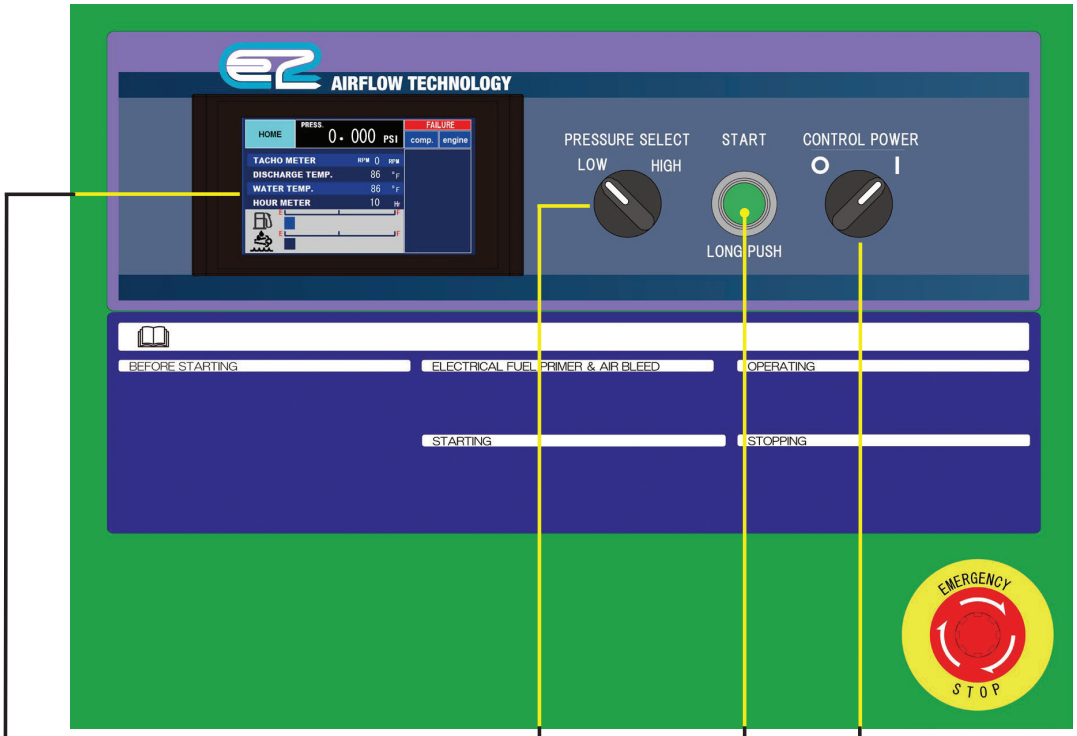

A180427

PRESSURE SELECTOR switch (MA375-DP T4F only)
Switch to change high pressure mode and low pressure mode.

[START] button
Start operation by holding the button for 1 second.

[CONTROL POWER] switch
Switch to start and stop the unit.

Touch Screen
Display operation conditions and set each parameter.

Lubricating oil・Coolant・Fuel・DEF

Engine oil

Use recommended engine oil listed below.
Be sure to use CJ class or higher engine oil or superior class. (Using engine oil with poor quality may shorten the life of the engine).

Classification	API service classification CJ-4 class or higher
Viscosity	SAE10W-30

IMPORTANT

- Viscosity of engine oil greatly affects starting, performance, and oil consumption of the engine, as well as engine wear.

Ambient temperature range and oil viscosity (SAE)

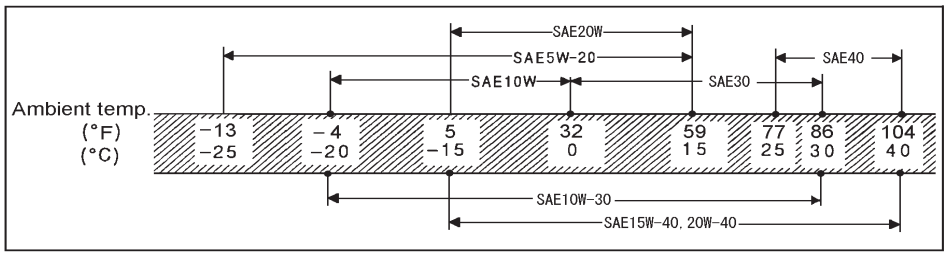

A180160E

- Mixing two or more different brands of oil can compromise oil performance. Do not mix oils.
- **Follow the designated regulations to dispose of engine oil.**

Compressor oil

Make sure to use recommended oil listed below.
Even continuous oil replenishment cannot improve its deteriorated condition. Make sure to change the oil completely at every scheduled interval.

Maker	Brand
MOBIL	MOBIL RARUS SHC 1024
SHELL	SHELL CORENA S4R (VG32)

IMPORTANT

- Mixing different brands of compressor oil could cause an increase in viscosity and make compressor oil sticky, and could result resulting in the compressor air-end sticking. Avoid mixing different brands of compressor oil.
- If mixing of compressor oil brands does occur, the compressor air-end must be cleaned. Contact your dealer.
- **Follow the designated regulations to dispose of compressor oil.**

Coolant

Coolant freezing could cause cracks of cylinder and radiator. Be sure to always use mixture of LLC (antifreezing solution) and soft water (like good quality tap water).

IMPORTANT

- Water with dirt, sand, and/or dust, or hard water such as well water (ground water) will cause deposits inside the radiator or cylinder head, resulting in engine overheating due to poor flow of coolant.
- Adjust mixing ratio of LLC (Antifreeze) with water according to temperature. (Machines delivered from the factory have an LLC (Antifreeze) mixing ratio of 55%) Use an LLC (Antifreeze) mixing ratio between 30 and 60%. See the table below. (Using an LLC (Antifreeze) mixing ratio of less than 30% may decrease the antifreezing effect of the LLC (Antifreeze).)

Mixing ratio of LLC (antifreeze) (reference)

Outside temperature (°F)	5	-4	-13	-22	-31	-40	-49
Outside temperature (℃)	-15	-20	-25	-30	-35	-40	-45
Mixing ratio (%)	30	35	40	45	50	55	60

- Use coolant that conforms to SAE J814/SAE J1034/ASTEM D3306.
- **Follow the designated regulations to dispose of LLC (Antifreeze).**

Fuel

IMPORTANT

- Never use fuel with sulfur content greater than 0.0015% (15ppm)
- Use only ultra-low sulfur fuel.
- Use such diesel fuel which conforms to standard EN590 or ASTM D975.
- Use only clean diesel fuel. Never mix fuel with kerosene or other additives.
- **Dispose of fuel in accordance with all applicable regulations.**

CAUTION

- Diesel fuel is required to meet the following conditions.
  - Free from even minute dust particles.
  - High optimum viscosity.
  - High cetane number.(45 or more)
  - High fluidity even at low temperature.
  - Low carbon residue content.

DEF

DEF is transparent, colorless, and non-hazardous. In some circumstances, DEF will put off odor, but this is normal and not indicative of any problems.

IMPORTANT

- Only use DEF which conforms to API standards.
- Store DEF in a sealed container away from direct sunlight to prevent water evaporation.
- The usable period of DEF depends on temperature. For details, reference the engine manual.
- If a substantial quantity of DEF is not within specification, contact the DEF supplier for assistance with disposal. Do not dump substantial quantities of DEF onto the ground or send DEF to wastewater treatment facilities.

WARNING

- Avoid contact with eyes. In case of contact, immediately flush eyes with large amounts of water for a minimum of 15 minutes.
  - Do not ingest DEF. In the event that DEF is ingested, contact a physician immediately.
  - Avoid prolonged contact with skin. In case of accidental contact, wash skin immediately with soap and water.
  - Reference the Materials Safety Data Sheet (MSDS) for additional information.

Check before starting unit

Make sure to check the unit before operation.
If an issue is found, be sure to repair it before operating the unit.
Make sure to make daily checks before operation.

WARNING

- Failure to perform regular equipment checks could result in death or serious injury, or in equipment damage.

Check engine oil level

Unit should be on a level surface before checking oil level.
Wait 10 to 20 minutes after stopping the engine before checking the oil level.

1. Pull out the oil level gauge and wipe it with a clean cloth.
2. Insert the oil level gauge fully and pull it out again. If the oil level gauge shows the oil level between LOW and HIGH, it is normal.
3. If the oil level is below its LOW, add engine oil from the oil filler port [A].

- While checking oil level, check also for contamination. If the oil is dirty, contaminated, or should be changed according to the periodic inspection list, change the oil. (See “Change Engine Oil” in Maintenance)
- When adding oil, do not overfill.

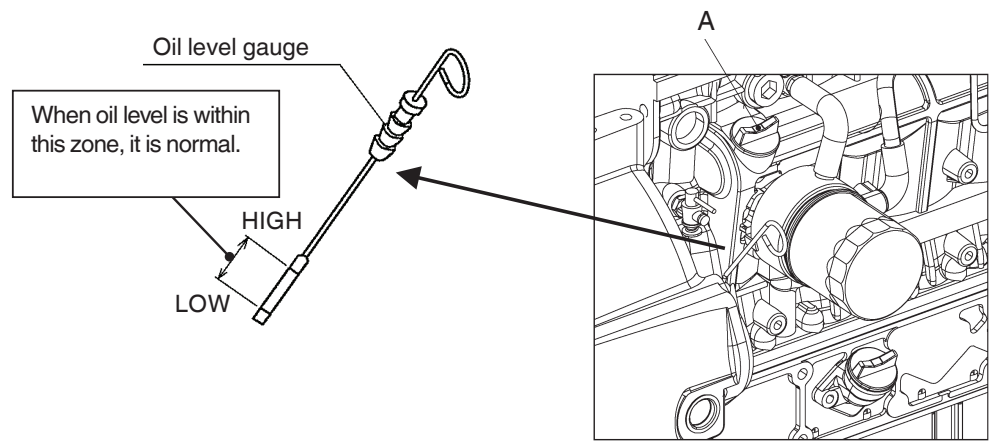

A150804

Check coolant level

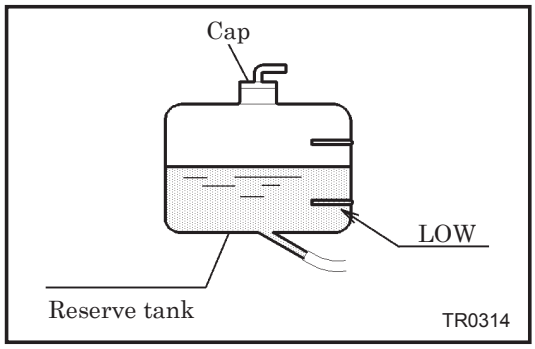

- Check the coolant level in the reserve tank. If it is lower than the limit, open the cap and replenish the coolant. (Level must be kept above LOW mark.)
- If it is lower than the limit or empty, open the cap and check the coolant, then replenish the coolant to radiator and reserve tank. (See “Change Coolant” in “Maintenance”)

WARNING

- When removing the radiator cap, first unfasten it to decrease internal pressure before removing. Sudden release of hot pressurized coolant could result in death or serious injury.

IMPORTANT

- Operating the machine without sufficient coolant could result in engine damage.

Check compressor oil level

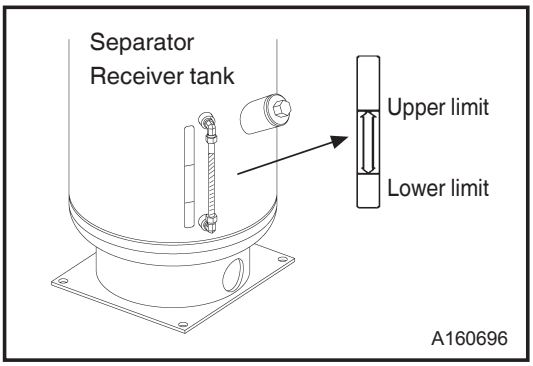

- Place the machine on level ground when checking the oil level.
- After checking and confirming that the residual pressure in separator receiver tank is 0PSI, replenish the tank with compressor oil so that the oil level is kept higher than the Lower limit of level gauge plate. Make sure to check the level of compressor oil is in the range between upper limit and lower limit when machine is operating. (See “Change Compressor Oil” in “Maintenance”)
  Note: Supply of excessive oil can cause deterioration of oil separation performance and the like.

WARNING

- When filling the separator receiver tank with compressor oil, stop the engine, and make sure that the pressure gauge indicates 0PSI and there is no residual pressure in it, and then gradually loosen the oil filler cap for refilling oil.
- If residual pressure is left in the separator receiver tank, hot compressed air and hot compressor oil could result in death or serious injury.

Drain separator receiver tank

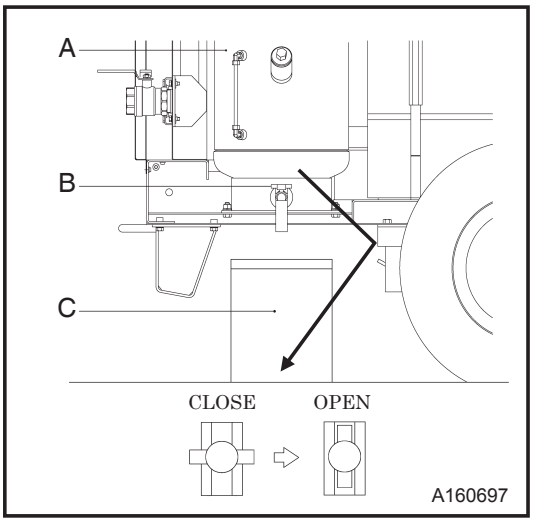

- Gradually open the drain valve [B], fitted under the separator receiver tank [A], to drain the condensate.
- Be careful not to fully open the drain valve. Otherwise, oil may be lost.
- After draining the oil completely, close the drain valve securely.
- Drain the condensate in a container [C], then dispose of condensate according to the designated regulations.
- Touch the fluid and check its viscosity to determine whether it is condensate or compressor oil, as it is difficult to distinguish between the two.

WARNING

- After stopping the engine, confirm that the pressure gauge indicates 0PSI and there is no residual pressure in it, then open the drain valve gradually to drain the compressor oil.
- Note residual pressure in the receiver tank could force both extremely hot compressed air and oil to jet out and you may be scalded or seriously injured.

Check fuel

Before starting operation, make sure to check the level of residual fuel so that fuel shortage during operation can be avoided. Drain condensate accumulated at the bottom of fuel tank whenever necessary.

- Refilling fuel tank should be done in an outdoor well-ventilated place.
- **Never let fuel reach the filler pipe of the filler port. High temperature may cause fuel to expand and spill out. Also, fuel may spill out due to vibrations during movement or carriage.**

WARNING

- Fuel is extremely flammable and dangerous.
- Never bring lit cigarettes and/or matches close to the fuel.
- Refuel only after stopping the engine. Never leave an open fuel can near the machine. Do not spill. It could cause a fire. If fuel is spilled, wipe it up completely.
- Use of alcohol-base cleaning fluid can damage the fuel tank and result in cracks and fuel leaks.

Drain fuel tank

Open the drain valve [B] under fuel tank [A] and discharge drain. After drain is discharged completely, make sure to close drain valve [B]. Drain should be discharged to container [C] and disposed according to regulations.

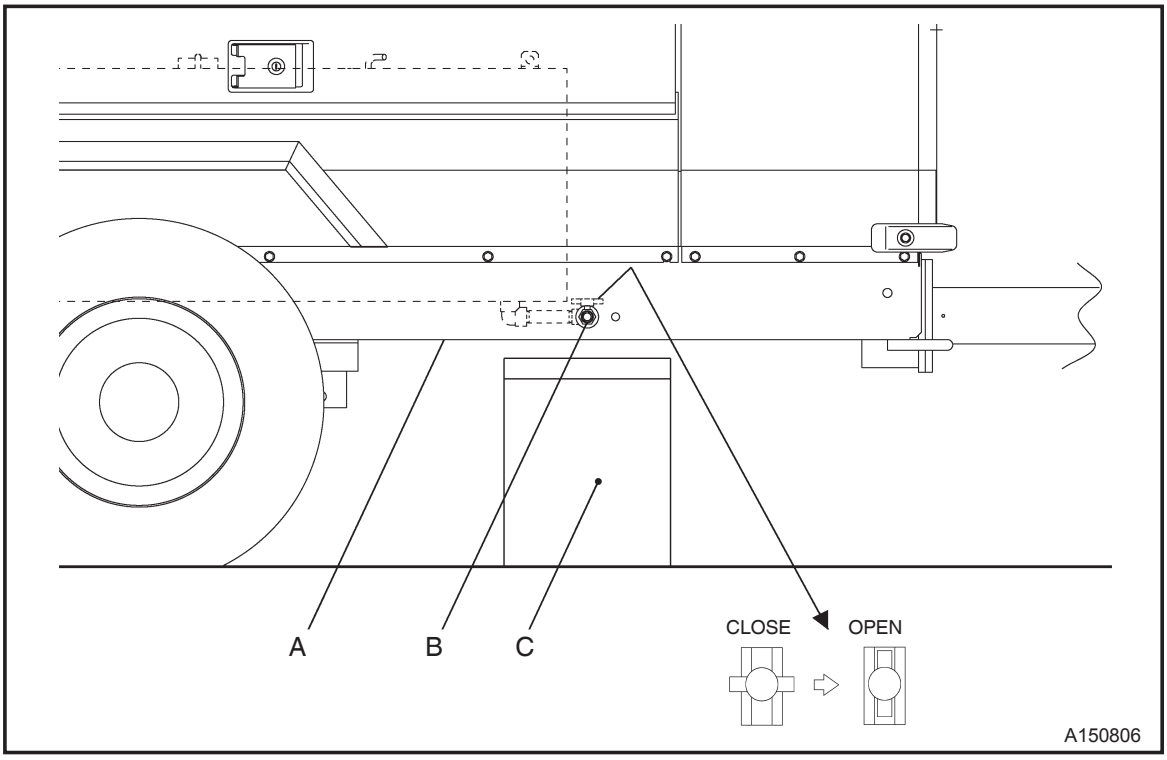

Check DEF Level

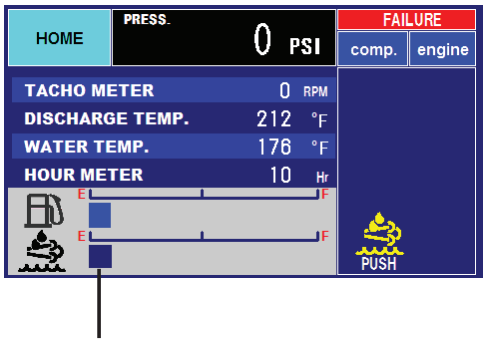

DEF TANK LEVEL

A180471

- If DEF tank level is below 15%, an icon will be displayed as shown below. If the icon is pressed, a more detailed explanation of the DEF issue will be displayed on the warning screen.
- If DEF tank level is below 5%, the engine may stall when opening service valve due to output restrictions. If DEF tank level is at 0%, the ENGINE STOP indicator will be displayed and the engine will shut down. Refill DEF to restore.
  Note: When refilling diesel fuel, refill DEF as well.

DEF Tank level display

State Description	DEF Level	Over 15%	Below 15%	5%	0%
Indicator	Icon (DEF Level)	-	PUSH	PUSH	PUSH
	Engine Stop	-	-	-	STOP

Check sedimenter for condensate

When the red float [B] under the element [A] in the fuel filter is raised to the upper level, drain the condensate.

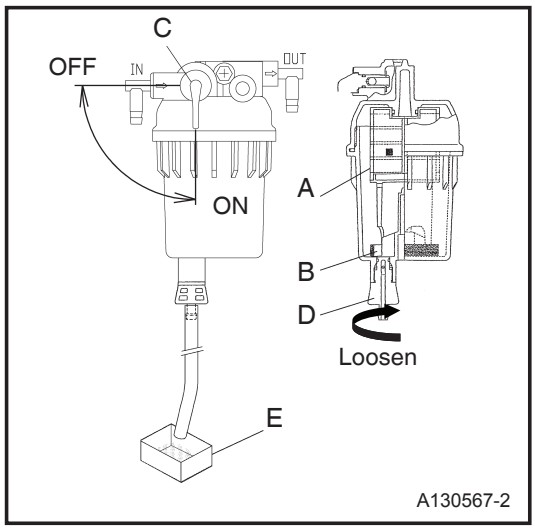

1. Turn the fuel selector valve [C] to the “OFF” position.
2. Loosen the drain valve [D] to drain out condensed water inside.
3. Make sure to tighten the drain valve [D] securely after draining the condensate.

- Drain the condensate into a container [E], then dispose of condensate according to the designated regulations.

CAUTION

- When checking, do not use alcoholic parts cleaner for cleaning. If it sticks to plastic parts, which might causes cracks and less visual recognition for fuel level. In worst case, which might causes cracks and fuel leaks.

Check wiring

Check wiring for any loose connection, damage to insulation, disconnection, and short-circuit.

Check piping

Check piping for any loose connections. Also check each hose and pipe for any tears or leaks.

Check the interior of the machine

Periodically check inside the machine for dust and flammables.

CAUTION

- Be sure to wear protective gear such as a helmet, protective glasses, earplugs, safety shoes, gloves and a dust mask.
- The muffler and exhaust valve become hot during operation. Be sure to remove combustibles such as woodchips, dead leaves, waste paper, etc.
- In case of a fire, make sure to keep a fire extinguisher near the machine.
- It is helpful to keep emergency contact numbers for fire, ambulance, urgent care clinic, etc., in a visible location inside the machine.

Check belt tension

Follow the procedure below to adjust tension of the belt.

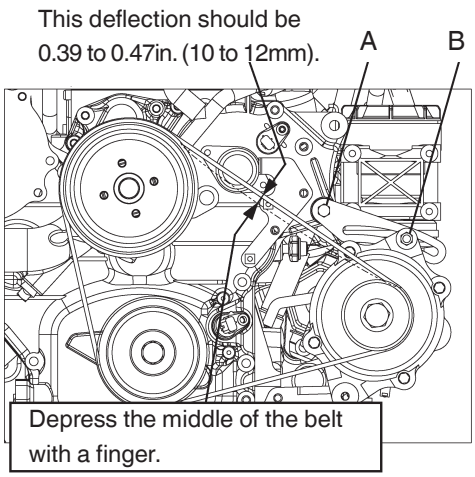

1. Visually check for cracks or tears in the belt.
2. Belt deflection should be 0.39 to 0.47in. (10 to 12mm) when you depress the middle of the belt with your finger with a force of 98N·m (10kgf·m).
3. Adjust the tension by gradually loosening the fastening bolt [A] or nut [B] of the alternator. After adjusting, be sure to tighten lock bolt or lock nut firmly.
4. Make sure to not get any grease or LLC (Antifreeze) on the belt. Wipe off completely.

WARNING

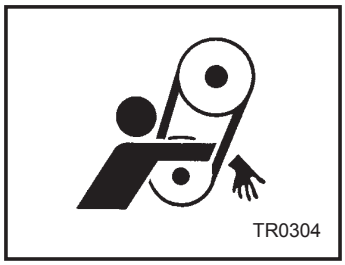

- Attempting to check or adjust belt tension while the machine is in operation could result in death or serious injury. Before checking or adjusting belt tension:
- Stop the engine and remove the starter key.
- Remove the negative (–) cable from the battery.

IMPORTANT

- Overtightening the belt could result in damage to the belt, shafts, or bearings.
- A loose belt could result in belt slippage and premature belt wear.

Opening and closing doors

Pull the handle forward to open the door. Be sure to close the door tightly so that its latch is firmly caught.

WARNING

- Keep the door closed and locked while running the unit.
- If the door has to be opened, keep hands away from rotating parts or hot components.

Operating Procedure

For proper cooling and airflow, make sure that all enclosure doors are closed before starting.

Procedure to start the unit

Start-up procedure.

During the warm-up operation, examine equipment for any looseness, leakage of water, oil, fuel, and other irregularities.
Also, make sure that diagnosis lamp is off.

1. Close fully service valve.
2. Set the “CONTROL POWER” switch to  from  .
3. Make sure that the pressure reading [PRESS.] on the home screen indicates [0] PSI.

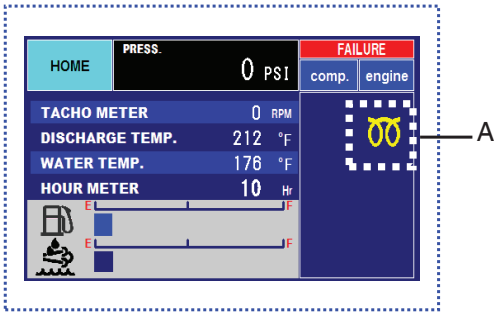

4. Once the glow lamp [A] turns off, press the [START] button for 1 second or longer to start the engine.
   The starter switch will stop itself automatically after 15 seconds. Wait at least one minute for any subsequent starting operation; otherwise, the starter motor may overheat and become damaged.

- See the table below for starting unloader operation. It varies according engine speed.

	MA400 T4F	MA375-DP T4F	
Usage pressure	100PSI	150PSI	100PSI
Engine speed	About 1,450rpm		

- The time of starting unloader operation changes according to the discharge air temperature as mentioned in the following table.

Discharge air temperature	Required time for starting unloader operation
Lower than 140°F(60℃)	It exceeds 120 seconds or 30 seconds or certain seconds until discharge air temperature becomes 140°F(60℃) or more degrees which comes first.
Higher than 140°F(60℃)	30 seconds

5. Once the engine has started up, leave it running to warm-up for 5 minutes.
   The discharge air pressure gauge [B] in this condition ranges from MA400 T4F: 43 to 130PSI / MA375-DP T4F: 43 to 174PSI.
6. After finishing warming up operation, open the service valve provided at the outlet of compressed air and start service job.

A180436

WARNING

- Do not operate the machine with service valves and relief valve open unless air hoses and/or pipes are connected.
  High-pressurized air could result in death or serious injury.
- If the machine must be temporarily operated with its port open, be sure to mount a silencer to reduce noise, and wear hearing protection such as earplugs to prevent hearing damage.

IMPORTANT

- Be sure to let unit warm-up after starting for smooth operation of the engine and the compressor.
  Do not operate the engine at full load immediately after it starts up. This will shorten the equipment life.

How to select operating pressure

[MA375-DP T4F]

- Set the PRESSURE SELECT switch [A] to the [LOW] position for 100PSI and the [HIGH] position for 150PSI.

Note: You can alternate the usage pressure during operation.

A180427

Method of activating air boosting

[MA375-DP T4F]

<MAIN SCREEN>

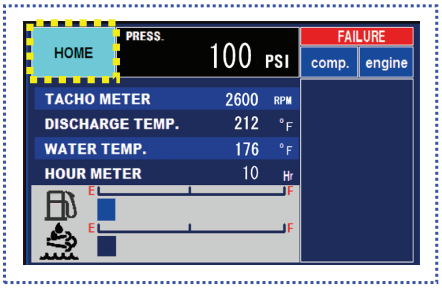

- Press “HOME” on “MAIN” screen.
- Select “OPERATION MODE”
- Set “AIR-BOOSTING MODE” to “ON” to activate.
  “AIR-BOOSTING MODE” is now active.
  When the “AIR-BOOSTING MODE” is activated, the engine speed will be increased to increase air delivery when pressure is low.

<HOME SCREEN>

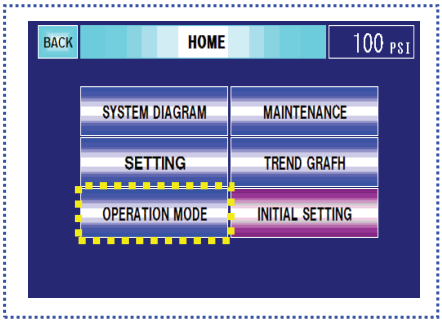

<OPERATION MODE SCREEN>

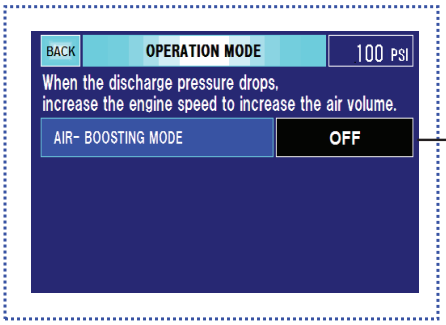

When set to “ON”, air-boosting mode will be active.

[About AIR-BOOSTING MODE]

When using air-boosting mode, air delivery will be increased by higher engine speed when the pressure is low. The air-boosting mode is on when the unit is shipped from factory.

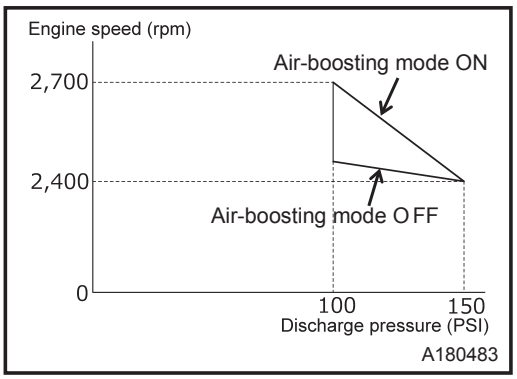

Operating procedures when engine fails to start up on first attempt

If the engine fails to start after following steps 1 through 4, set the CONTROL POWER switch to the position and wait 1 minute before attempting the steps again.

If the repeated procedure does not allow the engine to run, the following causes are suspected. Therefore, check the following items.

- No fuel
- Lack of air bleeding in fuel line (See “Air Bleeding in Fuel Line.”)
- Clogging of fuel filter
- Discharge of battery (Low cranking speed)

CAUTION	● Failure to wait 1 minute between starting attempts could result in damage to the starter or engine.

Operation in cold weather

- Use engine oil of a viscosity that meets the ambient temperature. See “Engine Oil.”
- Use LLC (antifreeze). Use correct amount to provide freeze protection, according to the ambient temperature.
- Battery should always be kept fully charged.

CAUTION	● When operating in cold weather make sure to change engine oil and coolant according to outside temperature.

Displays during operation

Regularly check to see if the screen indicates that the unit is working properly.
During normal operation, each indication of instruments is shown in the table below. Refer to the table for daily checks.

- The table below gives standard values. They may vary slightly depending on the operating conditions and other factors.

		Discharge pressure		
		MA400 T4F	MA375-DP T4F	
Starting unloaded operation		About 15 to 29PSI		
Usage pressure		100PSI	150PSI	100PSI
In operation	No load (Unload)	100 to 131PSI	150 to 174PSI	100 to 131PSI
	Full load	58 to 100PSI	58 to 150PSI	58 to 100PSI

Protection device		Indicator	
		GLOW	CHARGE
Monitor			
Before startup		-	ON
In operation		OFF	

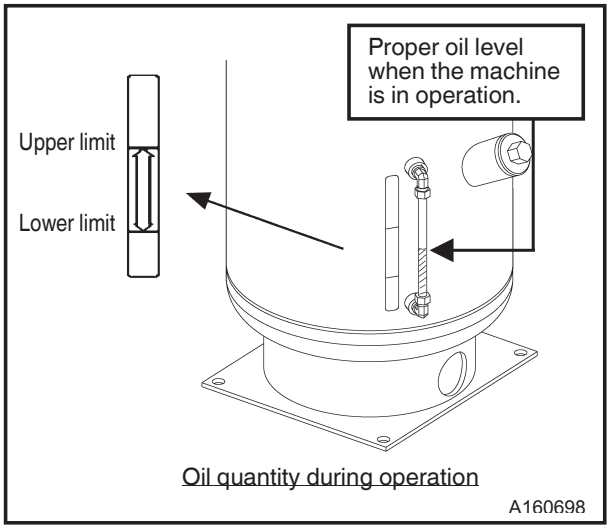

- When the machine is in operation under load, check to see that the compressor's oil level falls within the range between the lower limit and upper limit of the level gauge if the level is found to be insufficient, replenish the oil.

  Keep the operation log to record regular inspections of each component, so that trouble of the machine can be easily discovered and preventive measures can be taken.

WARNING

- Do not open the valves listed below when operating.
- Separator receiver tank drain valve
- Coolant drain valve
- Engine oil drain valve
- Oil cooler drain valve
- Fuel tank drain valve

IMPORTANT

- Make sure that discharge pressure always reads at least 58PSI during operation.
- If you keep operating with less than 58PSI, it will causes less separation of lubricating oil at oil separator, or baking caused by overheat of compressor body.

Stopping

1. Close fully service valve.
2. Set the CONTROL POWER switch [A] to position.
3. The engine will stop automatically after a 180 second cool down.
4. After stopping the engine, close and lock the front panel. Store the key in a safe place.

- Unless all the service valves are fully closed upon stopping operation, the compressed air will be sent in reverse direction in the hoses (pipes) connected to air tools and relieved to atmosphere continuously through the auto-relief valve. Further, when re-starting operation next time, compressed air will be jetted out through air valves.

A180437

Air bleeding in fuel line

Should the machine stop due to fuel shortage, perform air bleeding according to the following steps.

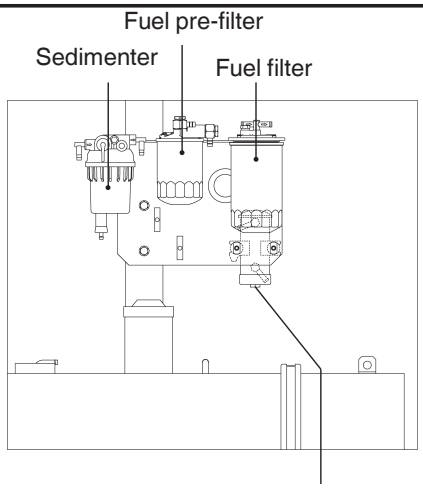

A180191

1. Refill the fuel tank.
2. When CONTROL POWER switch is turned to position, electromagnet pump starts to automatically bleed air in fuel line.
3. Air bleeding is completed in about one minute.

Operation of after cooler type

Draining after cooler

The condensed water drained from after-cooler contains a little bit of oil. So take care how to dispose of it.

[If condensate is found in discharged air]

- Be sure to check air discharge from after cooler drain outlet when operating. If drain is found in discharged air, clean silencer [A] at outlet. If it is dirty, replace it.
  When cleaning and replacing it, contact our office nearby or distributor because technical knowledge is required.

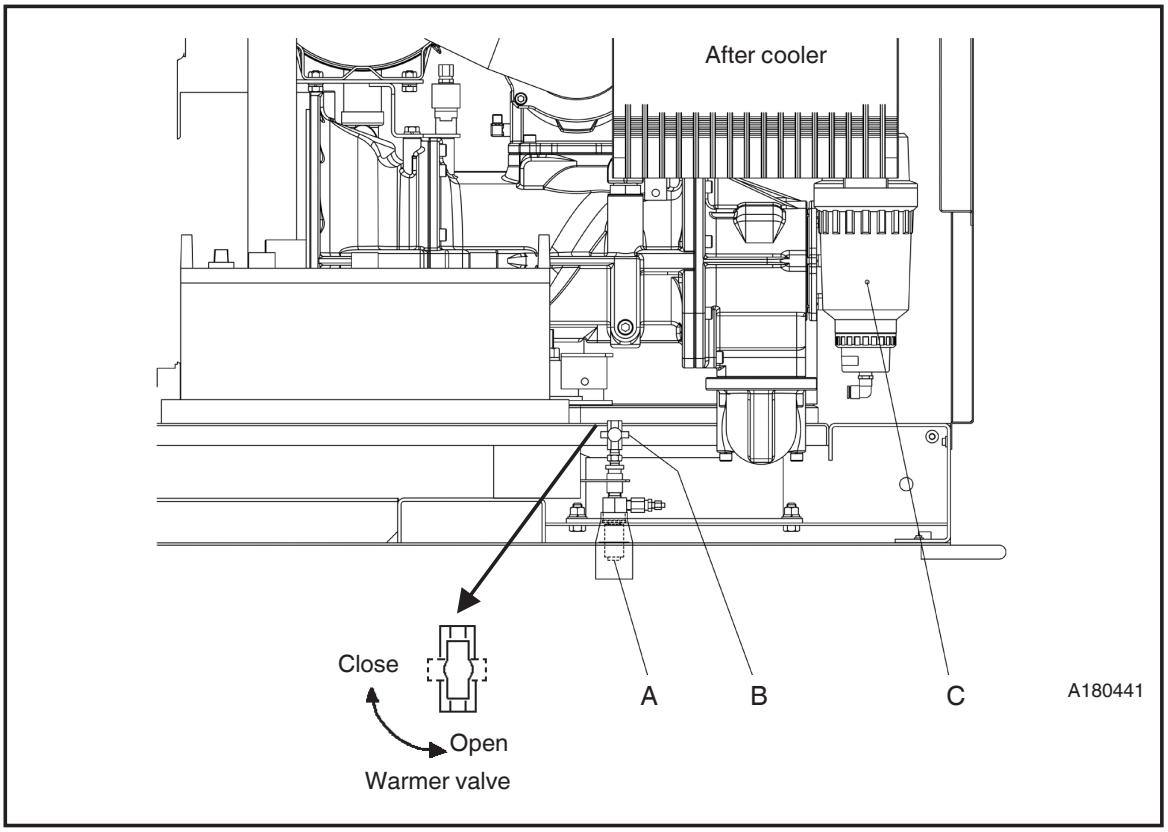

Drain warmer valve

The valve [B] is installed for drain antifreezing when discharging water separated at drain separator [C]. Be sure to use the valve with opened if ambient temperature is 41°F (5℃) or less.
If there is no risk of freezing, use the valve [B] with closed.

To prevent freezing

- If cease the operation and storage the machine under use environment in winter season, be sure to open the service valve 2 to 3 times in order to remove water droplet in air piping such as after-cooler before stoppage of engine.

Selection of service air

Switch the 3-way switching valve and you can use low or normal temperature air to meet your use.

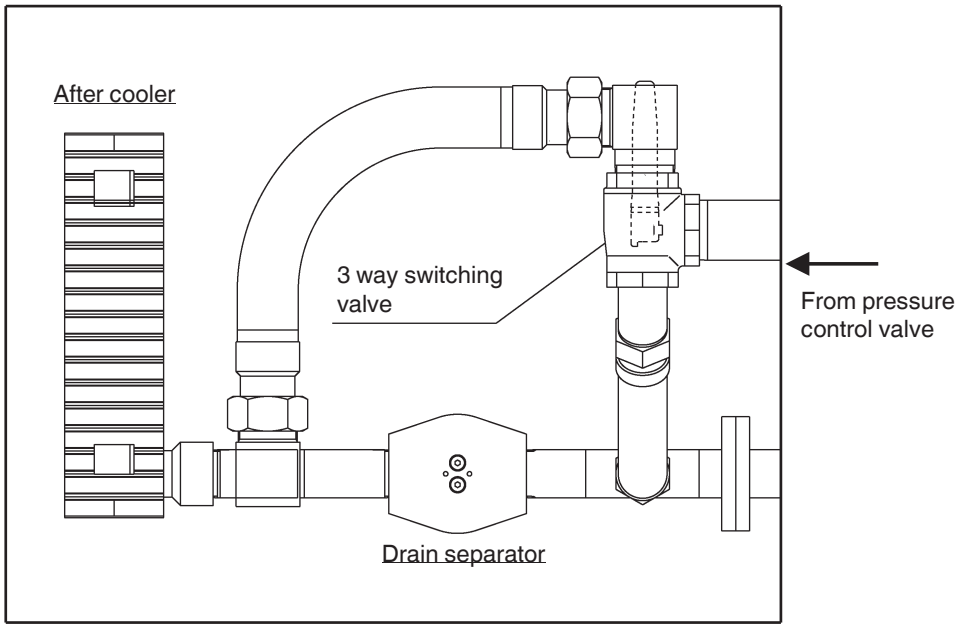

View from separator maintenance cover

A150855

Service air / Operation	Low temperature air	Normal temperature air
3 way switching valve	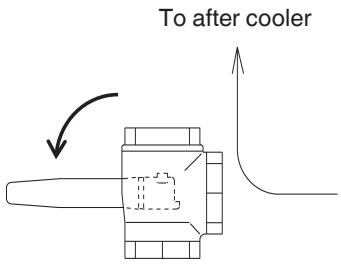	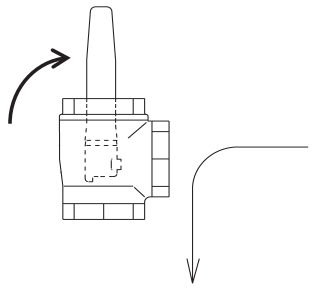

SETTING screen

<HOME SCREEN>

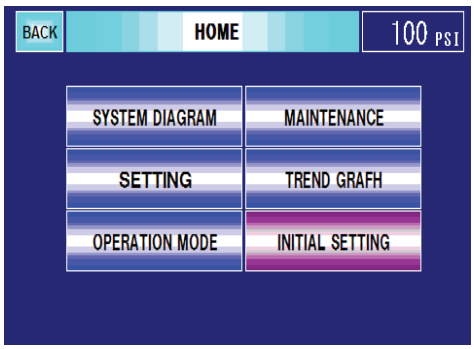

- Operating condition, running parameters, and various other settings and be can be read and changed here.

SYSTEM DIAGRAM

<MAIN SCREEN>

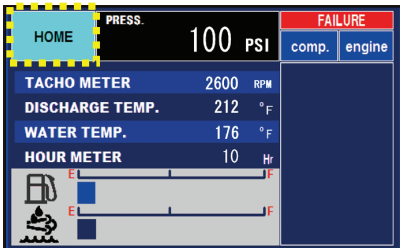

1. Press “HOME” on “MAIN” screen.
2. Select “SYSTEM DIAGRAM”
3. Current operating parameters are displayed.

<HOME SCREEN>

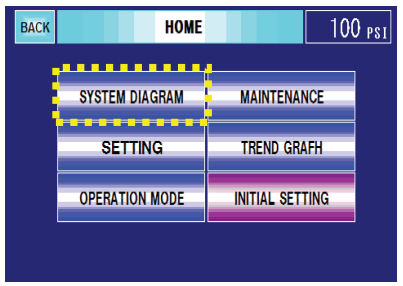

<SYSTEM DIAGRAM 1 (ENGINE)>

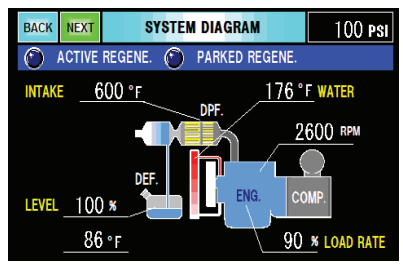

<SYSTEM DIAGRAM 2 (COMPRESSOR)>

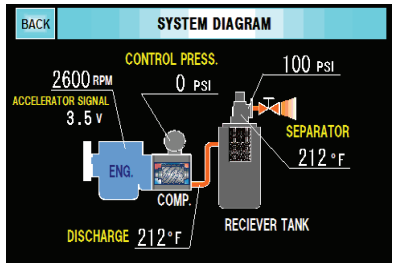

Time and temp adjustment

Depending on the weather and circumstances, you can change the time for start-up and cooldown of the unit, as well as initial discharge temperature.

<MAIN SCREEN>

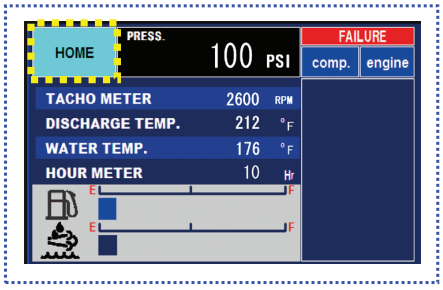

<Procedure>

1. Press “HOME” on “MAIN” screen.
2. Select “SETTING”.
3. “SETTING” screen is displayed.

- Touch any of the settings and a numerical keypad will be displayed. Input the values required within range.

<HOME SCREEN>

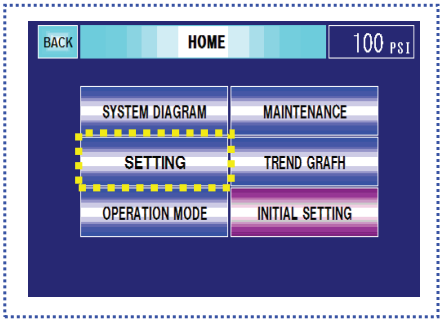

<SETTING SCREEN>

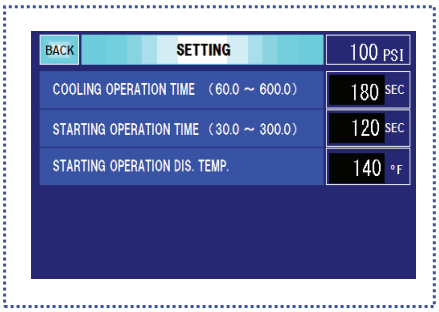

<SETTING>

- COOLING OPERATION TIME 180sec
- STARTING OPERATION TIME 120sec
- STARTING OPERATION DIS.TEMP. 140°F

MAINTENANCE

The Maintenance alarm schedule for major items can be set at the user's discretion.

<MAIN SCREEN>

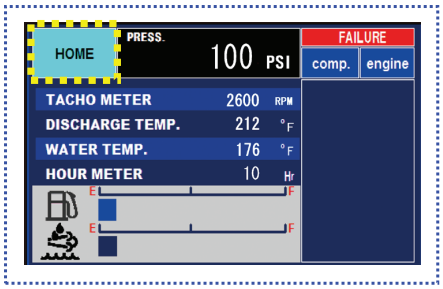

1. Select “MAINTENANCE.”
2. “MAINTENANCE” screen is displayed.
3. Press “NEXT” to show engine items.
4. Touching any value will display a number pad.
5. Touching any value will display a number pad.

● No maintenance alarm will be displayed if the scheduled time is set to [0].

<HOME SCREEN>

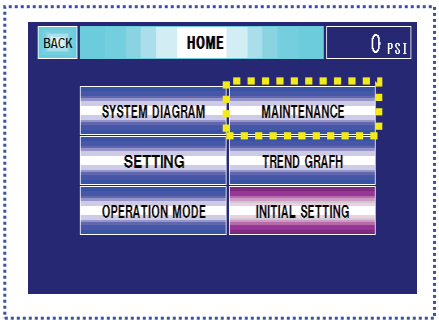

<MAINTENANCE COMPRESSOR>

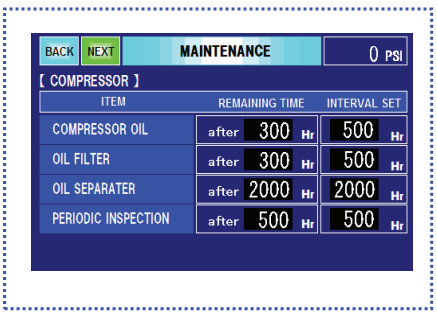

<MAINTENANCE ENGINE>

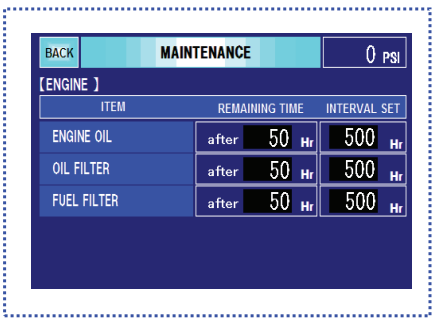

Log

The operating log for the unit can be can be read on this screen.

[Trend graph]

- Select “TREND GRAPH” on “HOME” screen to show “TREND GRAPH” screen.
  (Sampling interval is every 2 seconds, log time is up to 40 minutes.)
- Press “NEXT” to show graphs of each items.

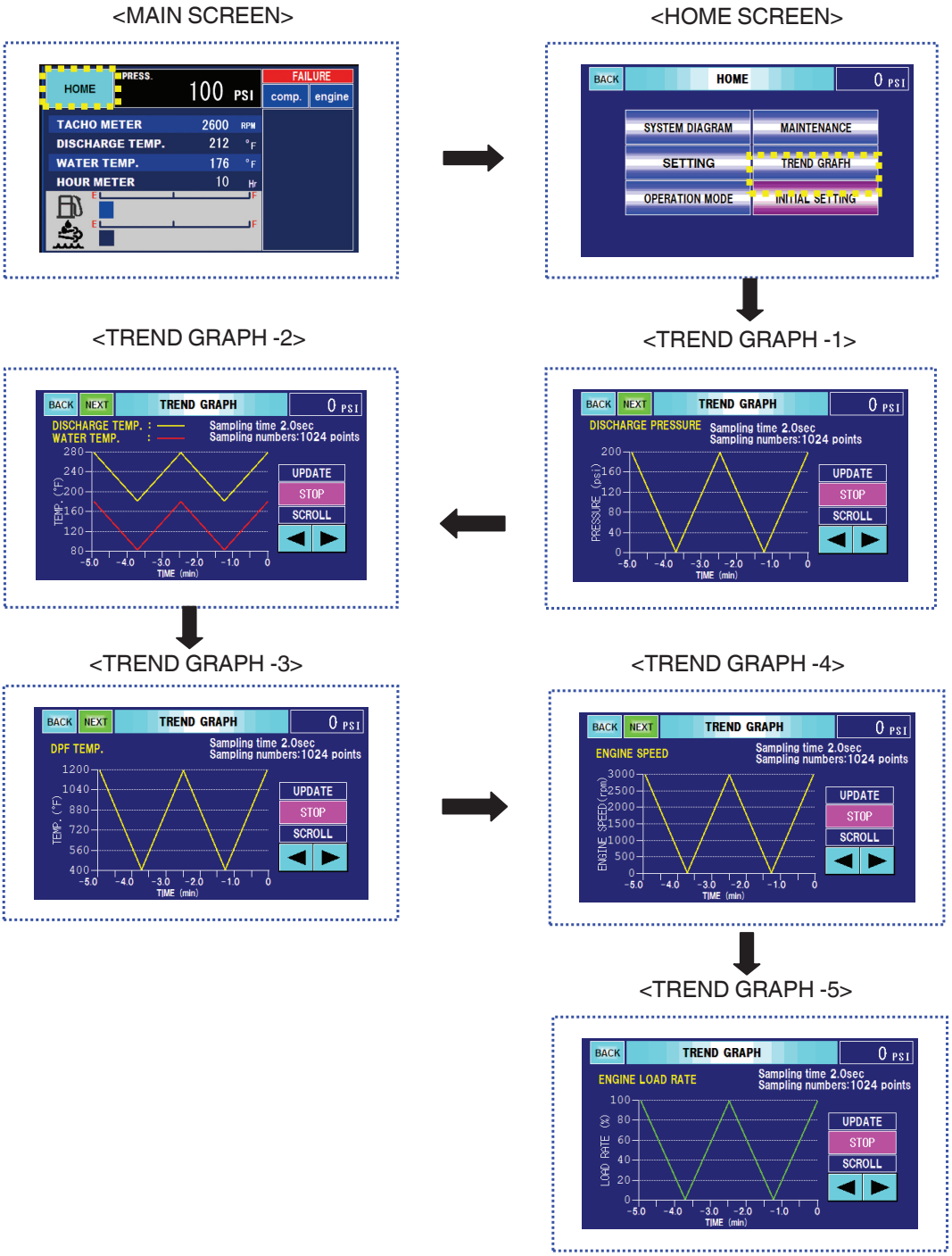

[Scroll graph]

- To scroll the graph, press the stop key on this screen to stop live updates. After pressing “STOP,” press ◄ ► to scroll graph.
- Press “UPDATE” to resume live updates to the graph.

INITIAL SETTING

- The “INITIAL SETTING” section on the “HOME” screen is to restore the unit to factory settings. It is not required during normal operation. If pressed by mistake, a password input may appear to confirm you wish to reset the machine. To exit this screen, press the “CAN” button [A] to cancel.

<HOME SCREEN>

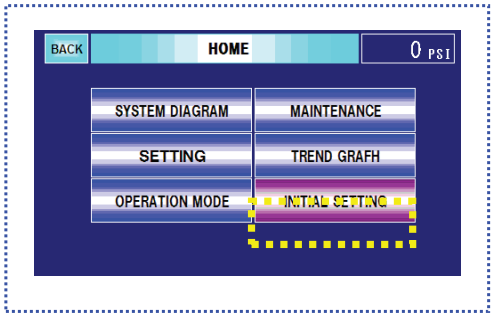

<PASSWORD INPUT SCREEN>

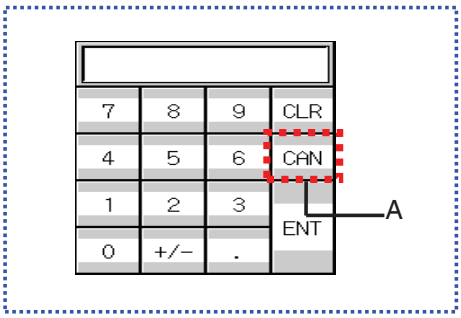

DPF regeneration

- The engine will make a revving sound when starting and stopping the regeneration process. This is normal and is from the adjustment of the air intake throttle and EGR on the engine.
- Exhaust gas may smell different from regular diesel during regeneration, which is normal.

WARNING	● During regeneration, the exhaust gases reach temperatures hot enough to cause severe burns, or ignite and melt other materials. During regeneration, keep clear of the area above and immediately surrounding the engine, and remove any possibly flammable objects.

Natural regeneration

- When the engine is operated under high loads, exhaust gas temperature is hot enough to burn off soot accumulated in the DPF without entering a regeneration state.

Automatic regeneration

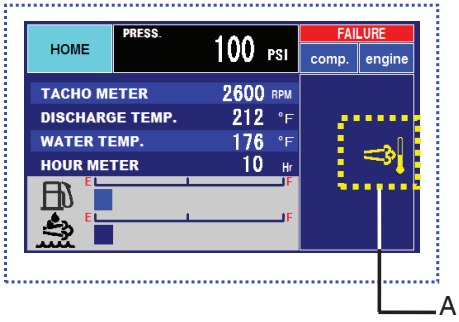

- Exhaust temperatures are increased periodically to perform automatic regeneration to avoid soot accumulation in the DPF.
- The unit can still be operated normally during this type of regeneration.
- A high exhaust system temperature indicator [A] will be displayed onscreen when the exhaust gas temperature is above 842°F (450℃).
- If the engine regeneration intervals are consistently shorter than 5 hours, change the engine oil. Contact a service center if this condition continues after changing the oil.

Manual regeneration

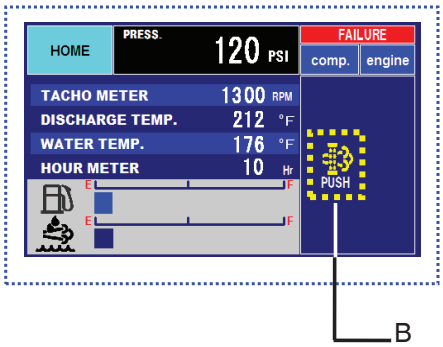

- The exhaust temperature may not reach temperatures hot enough to burn soot during operation in cold weather or under low loads. If the unit is operated under low load or in cold weather for an extended time, a DPF indicator [B] will be displayed. Immediately take action and begin a Manual Regeneration by following the steps below.

1. Stop any ongoing work and close the service valve.
2. Select “SYSTEM DIAGRAM” on the “HOME” screen and make sure that the water temperature is above 158°F (70℃)

- If the water temperature is below 158°F (70℃), let the unit warm up until the water temperature is above 158°F (70℃).

3. Press the DPF indicator [B] on the “MAIN” screen.
4. The “PARKED REGENERATION” screen will be displayed.

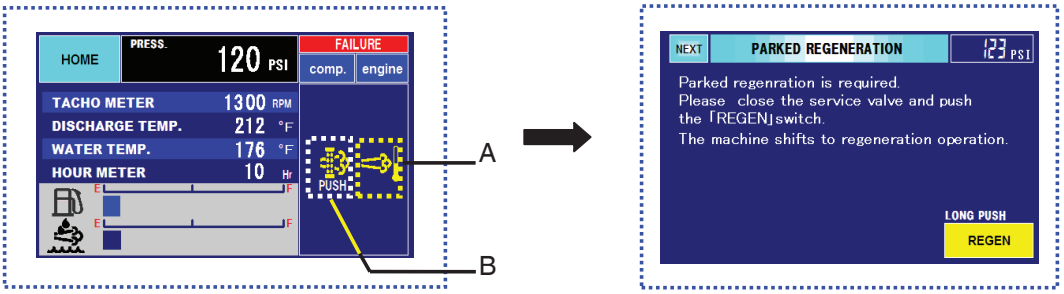

5. Hold the "REGEN" button to start manual regeneration. The High Exhaust System Temperature (HEST) indicator [A] will be ON.
   Note: It is normal for engine speed to vary while performing manual regeneration.

- Regeneration will take anywhere from 15 to 30 minutes.
- If the exhaust temperature is higher during regeneration, the High Exhaust System Temperature (HEST) indicator [A] will be ON.
- The DPF indicator [B] will be cleared once the manual regeneration is completed.
- When finished, the unit will return to an unloaded state and be ready for normal operation.

CAUTION

- Do not stop the engine during the manual regeneration.
- Only begin manual regeneration after the engine is warmed up. If the water temp is not enough high enough the unit will cancel the manual regeneration, as it may only further clog the DPF if performed cold.

IMPORTANT

- If the DPF indicator is ON, take immediate action to perform the manual regeneration. Failure to do so could result in damage to the DPF or a fire in the exhaust system.

Emergency Stop

Emergency stopping procedures

- If it is necessary to stop the machine for an emergency, press the Emergency Stop button which is set up under part of the operation panel.
  When doing shut down by emergency stop button, the machine will be stopped immediately.

Reset the emergency stop button

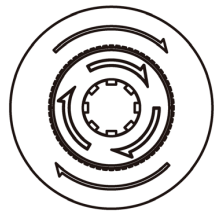

- After emergency stopping, make sure to determine the cause of the emergency and the remedy. Reset the emergency stop button only after making sure the cause of the emergency has been remedied.
  To reset the button, turn the button head in the direction of the arrow.

Note: If the emergency stop button is not reset, the machine cannot start.

Troubleshooting

Warning / Emergency display

Warning / Emergency

Alarm display.

<MAIN SCREEN>

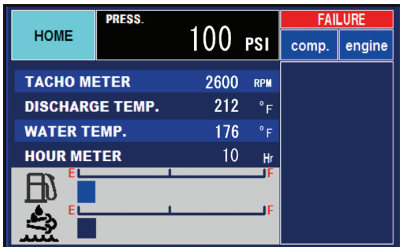

- When an alert or fault occurs, an indicator will blink. Touch the icon for more details.

<FAILURE comp.>

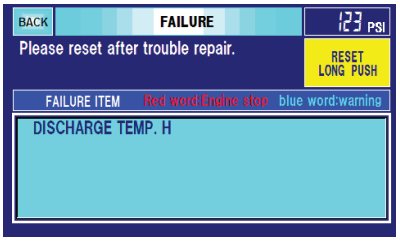

[COMP. button blinking]

- Press “comp.” to display more detail on the error. (See “Troubleshooting Chart.”)
- After clearing the cause of the error, press and hold the “RESET” button to clear the alert.

<FAILURE engine>

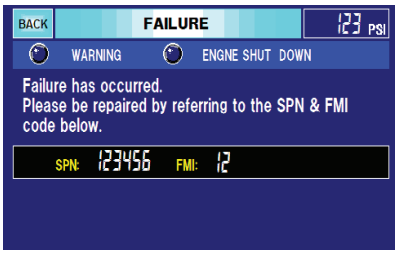

[ENGINE button blinking]

- Press “engine” to display diagnostic code(s). If necessary, contact your dealer for diagnosis and repair.

Indicator lamp and Warning / Emergency display

[Indicator lamp] Turn the CONTROL POWER switch to position. Then the lamp goes on.

Item	Contents	Measures	Monitor
Glow	When the unit is switched on, the preheat indicator will be displayed briefly during preheating.	—	
Charge	The battery indicator will be displayed when it is not being charged.	Check wiring. Check alternator.	

[Warning display] When a 'warning' issue occurs, the trouble button flickers, but the unit continues to operate. Press the trouble button to display the failure code.

Display	Contents	Measures
DISCHARGE TEMP.H	Displayed when the air temperature at the outlet of the air-end reaches 239°F (115℃).	See "Troubleshooting Chart"
ENGINE WATER TEMP.H	Displayed when coolant temperature reaches 212°F (100℃).	
COMP.AIR FILTER CLOGGING	Displayed when air filter gets clogged and suction resistance increases. [Actuating resistance is more than 0.9PSI.]	Clean/Change
ENGINE AIR FILTER CLOGGING		
ENGINE CHARGE DEFECT	Belt loosened and/or cut Faulty generation of alternator	Check/Change
SEPARATOR TEMP.H	Displayed when the air temperature at the outlet of the separator reaches 239°F (115℃).	See "Troubleshooting Chart"

[Emergency display] When an 'emergency' issue occurs, the trouble button flickers, the emergency stop is activated, and the unit shuts down. Press the trouble button to display the failure code.

Display	Contents	Measures
DISCHARGE TEMP.HH	Displayed when the air temperature at the outlet of the air-end reaches 248°F (120℃).	See "Troubleshooting Chart"
ENGINE WATER TEMP.HH	Displayed when coolant temperature reaches 221°F (105℃).	
ENGINE OIL PRESSURE DOWN	Displayed when engine oil pressure drops. [The function pressure: 14PSI.]	
SEPARRATOR TEMP.HH	Displayed when the air temperature at the outlet of the separator reaches 248°F (120℃).	
ENGINE SPEED DOWN	Displayed when engine revolution speed is slow down. [Operation speed: less than 900min^{-1}]	
DISCHARGE TEMP.SENSOR	Displayed when the air temperature sensor at the outlet port of compressor air end is disconnected.	
SEPARATOR TEMP.SENSOR DISCONNECTION	Displayed when the separator outlet air temperature sensor is disconnected.	

SCR inducement

If an SCR system error occurs, the SCR malfunction indicator [A] will blink. Check for the cause of the error and take appropriate action. If no action taken, after 3 hours 15 minutes the engine will begin shutting down.

<MAIN SCREEN>

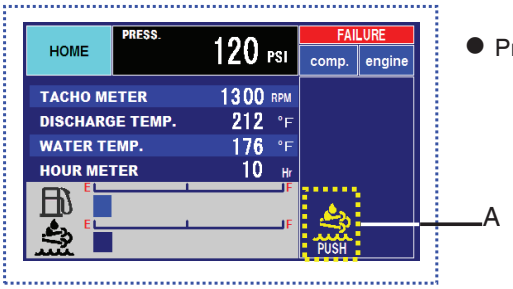

- Press the indicator [A] to view the cause of the failure.

<DEF SCREEN>

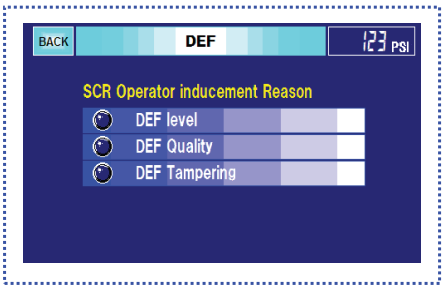

- When the DEF Level blinks, refill DEF and confirm the lamp is inactive.
- When DEF Quality blinks, replace DEF.
- When the DEF Tampering indicator blinks, check the DEF injection system and sensors.

CAUTION	
	● Stop the engine immediately if the indicators above blink, and contact your dealer.

Troubleshooting Chart

If any trouble occurs during operation, do not ignore it. Determine the cause and take appropriate measures.

Read the manual carefully and fully understand what to do in case of trouble.

- The better you understand the machine, the faster you can find a problem and solution.
- This chapter describes the symptom, cause and countermeasures of important troubles in detail:

Symptom	Cause	Countermeasures
Low starter revolution speed.	(1)Battery needs charging (2)Faulty battery	Charge battery Replace battery
The starter rotates normally but the engine does not start.	(1)No fuel (2)Fuel filter / prefilter clogged (3)Air in fuel line (4)Nozzle clogged	Add fuel Clean or replace Bleed air from fuel line Disassemble and clean nozzle
Discharge air pressure will not rise.	(1)Insufficient pressure adjustment	Adjust pressure
The engine does not reach the rated revolution speed.	(1)Unloader orifice clogged (2) Fuel filter / prefilter clogged	Disassemble and clean orifice Clean or replace
If the discharge pressure will not increase to the specified one, RPM will drop.	(1)Pressure regulator adjustment insufficient (2)Unloader orifice clogged	Adjust pressure regulator Disassemble and clean orifice
Safety valve relieves at unload	(1)Pressure regulator adjustment insufficient	Adjust pressure regulator
Oil mixes in air (poor oil separation)	(1)Scavenging orifice strainer clogged (2)Excessive oil in separator receiver tank	Disassemble and clean Drain separator receiver tank
Water found mixed in air. (Condensate separation malfunctioned.) For after-cooler type only	(1)Clogging of silencer at after cooler drain outlet (2)Inside of piping between drain separator and silencer clogged with dust	Disassemble/Clean/Change Disassemble/Clean
Insufficient free air delivery.	(1)Air filter element clogged	Clean or change element
It is indicated that engine oil pressure is abnormal, and engine stops.	(1)Engine oil shortage (2)Engine oil filter clogged	Replenish oil Change oil filter
High water temp. warning / shutdown	(1)Low coolant level (2)Belt slippage	Add coolant Adjust belt tension
High separator temp shutdown.	(1)Oil cooler clogged (2)Oil filter clogged (3)Belt slippage (4)Shortage of compressor oil	Clean oil cooler Change oil filter Adjust belt tension Add compressor oil
It is indicated that engine speed down is abnormal, and engine stops.	(1)Air in fuel line (2)Engine air filter clogged	Bleed air from fuel line Clean or change element

- Refer to the engine operator's manual for engine issues.
- For all other issues, contact your dealer.

Maintenance

Important Maintenance Items

The following table shows the inspection and maintenance intervals under normal operating conditions. When operated under harsh environmental conditions, inspection and maintenance must be performed more often.

General Maintenance Safety

WARNING

- Wear protective gear, such as a helmet, safety glasses, earplugs, safety shoes, gloves, and a dust mask, according to the maintenance work being performed.
- When necessary to inspect the machine while in operation, do not touch hot portions of the machine. Engine, exhaust manifold, exhaust pipe, muffler, radiator, oil cooler, air-end, pipe, separator receiver tank, and discharging pipe are especially hot, and contact could result in serious injury.

Hang a "Now Checking and under Maintenance" tag

WARNING

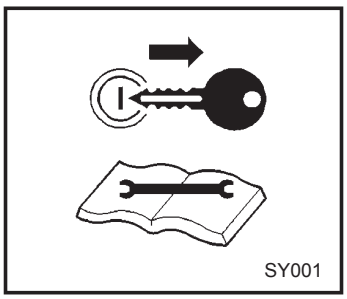

- Remove the starter key from the starter switch before starting inspection, and hang up a "Now Checking and under Maintenance" tag where it can be easily seen. The inspector must keep the key during checking and maintenance.
- Remove the negative (–) side cable from the battery.
- Failure to follow the procedure above could result in death or serious injury.

Oil Separator Inspection

CAUTION

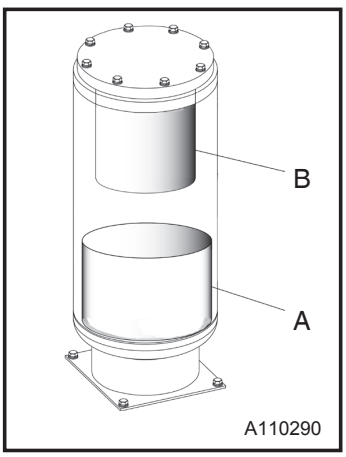

- Be sure to perform following periodic inspection and maintenance:
  A. Check and change compressor oil quantity
  B. Change oil separator

General Maintenance Guidelines

IMPORTANT

- Be sure to use recommended fuel, DEP, oil, grease, and antifreeze.
- Do not disassemble or adjust engine, compressor air-end or part(s) for which inspection or maintenance is not referred to in this manual.
- Use genuine parts for replacement.
- Any breakdown, caused by using unapproved parts or by wrong handling, will be out of the scope of “WARRANTY”.
- Keep the electrical components away from water or steam.
- Waste from machines contains harmful material. Do not dispose of such harmful fluids to the ground, rivers, lakes or ponds, and sea. It contaminates the environment.
- When draining waste fluid from machines, use leak proof containers to hold such fluids from machine.
- Be sure to follow the designated regulations when disposing of oil, fuel, coolant, filters, battery and other harmful things.

Inspection of Separator Receiver Tank

Periodic inspection of separator receiver tank

IMPORTANT

- Be sure to carry out the following cleaning and inspection of the separator receiver tank at least once every year.

Check for:

- Any damage found on the tank.
- Any excessive wear found in the fastening bolts on the cover.
- Any damage found to pipes and valves etc.

Maintenance Chart

(Unit:Hour)

	Maintenance	Daily	250	300	500	1,000	2,000	3,000	6,000	12,000
Compressor	Check compressor oil level.	○								
	Drain separator receiver tank.	○								
	Check for looseness in pipe connecting part, and wear and tear of pipe.	○								
	Check oil, water, fuel and air leak.	○								
	Check functions of all instruments and devices.	○								
	Check and clean clogging of air filter element.		○							
	Change compressor oil.			○ First time	○					
	Change compressor oil filter element			○ First time	○					
	Change air filter element				○					
	Clean strainer in the scavenging orifice.				○					
	Clean outside of the oil cooler.					○				
	Clean outside of the after cooler. (After cooler type)					○				
	Check and clean drain outlet port of after cooler. (After cooler type)					1 ○				
	Change oil separator.						●			
	Change nylon tubes.						☆●			
	Change rubber hoses.						☆●			
	Change O-ring of unloader.							★●		
	Check and change the unloader bushing.					2 ○		★●		
	Change pressure regulator							★●		
	Check consumable parts of auto-relief valve.							★●		
	Check consumable parts of vacuum-relief valve.							★●		
	Performance check of pressure control valve								●	
	Check and change O-ring and piston of pressure control valve.								★●	
	Change rubber coupling.									●
	Change oil seal/bearing.									●
	Change solenoid valve.									●

○ – Maintenance items to be done by Operator.

● – Maintenance items to be done by Dealer.

1 - If water is found mixed in the discharged air, do maintenance before the specified interval.

2 - In case of unloader malfunction, change unloader O-ring or bushing.

☆- Should be replaced every 2 years.

★ - Should be replaced every 3 years.

Note: Indicated replacement periods are rough estimates. Under harsh operating conditions, inspection/maintenance should be done more often.

Refer to engine operator's manual for engine maintenance items.

(Unit:Hour)

	Maintenance	Daily	50	250	500	1,000	2,000	3,000	6,000
Engine related	Check engine oil level.	○							
	Check coolant level.	○							
	Check fuel	○							
	Drain fuel tank.	○							
	Check DEF level.	○							
	Check sedimenter for condensate.	○							
	Check looseness in pipe connectors, terminals and tear in wiring.	○							
	Check belt tension.	○							
	Change engine oil.		○ First time		○				
	Change engine oil filter element.		○ First time		○				
	Check battery electrolyte.			○					
	Check and clean clogging of air filter element.			○					
	Check specific gravity of battery electrolyte				○				
	Change air filter element.				○				
	Change of fuel filter element.				○				
	Change of fuel pre-filter element.				○				
	Clean of element in sedimenter				○				
	Check for crack and leak on the exhaust flexible pipe				○				
	Clean inside of radiator.				●				
	Clean outside of the radiator.					○			
	Change coolant					☆○			
	Clean inside of fuel tank.						●		
	Change fuel hose.						☆●		
	Change radiator hoses.							☆●	
	Change wiring harness.								●

☆- Should be replaced every 2 years.

★ - Should be replaced every 3 years.

Note: Indicated replacement periods are rough estimates. Under harsh operating conditions, inspection/maintenance should be done more often.

	Maintenance	1,500	3,000	Remarks
Engine body	Change of breather filter element	○		
	Change DEF pump filter		●	See engine manual for more details.
	Check DEF hoses		●	See engine manual for more details.

Replacement Parts

Part number changes upon modification.

For replacement of parts, make sure that the part number is correct or applicable.

Part Name		Part Number		Quantity
		MA400 T4F	MA375-DP T4F	
Engine oil filter element		KUBOTA 1C020-32434	←	1
Air filter element for compressor air-end	Element [C]	32143 12500	←	1
Air filter element for engine side	Element [D]	32143 12800	←	1
Compressor oil filter element		37438 05601	←	1
Fuel filter element		KUBOTA 1K947-43172	←	1
Fuel pre-filter element	Element	KUBOTA 16631-43560	←	1
	O-ring	KUBOTA 16541-43330	←	1
Element in sedimenter	Element [E]	KUBOTA RD451-51940	←	1
	O-ring [F] (For element)	KUBOTA 04817-00160	←	1
	O-ring [G] (For body)	KUBOTA RD451-51930	←	1
Solenoid valve for starting unload		46811 30000	←	1
Solenoid valve for pressure switching		-	46811 31700	1
Solenoid valve for unloader spring chamber		46811 31800	←	1
Oil separator	Separator [A]	34200 03500	←	1
	Gasket [B]	34235 06000	←	1
	Gasket [C]	34235 06100	←	1
Pressure control valve	O-ring [A]	03402 15080	←	1
	O-ring [B]	21441 03700	←	1
	Teflon ring [C]	22505 03300	←	1
	Piston [D]	35303 10500	←	1
High pressure regulator		36400 24100	←	1
Low pressure regulator		-	36400 24100	1
Belt		KUBOTA 1K861-97011	←	1
Breather filter element (With O-ring)		KUBOTA 1J508-05812	←	1
Filter assy		KUBOTA 1J508-1966-0	←	1

Maintenance Items

Change engine oil

At 50 hours for the first change and at every 500 hours thereafter

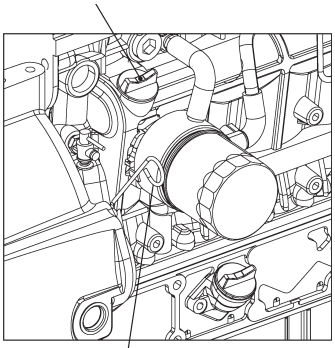

1. Remove the drain plug [A], open the drain valve [B], and drain the engine oil into an approved container.
2. After used engine oil is fully drained, close the drain valve [B], install the drain plug (A), and add new engine oil through the oil filler port [C].
   [Oil Capacity: approx. 13L]
3. After adding oil, remove the dipstick [D] and wipe it off.
4. Insert the dipstick [D] fully and remove it again. If the dipstick shows the oil level is between LOW and HIGH, it is normal.
5. Once oil is added, close the oil filler port [C] and replace the dipstick [D].

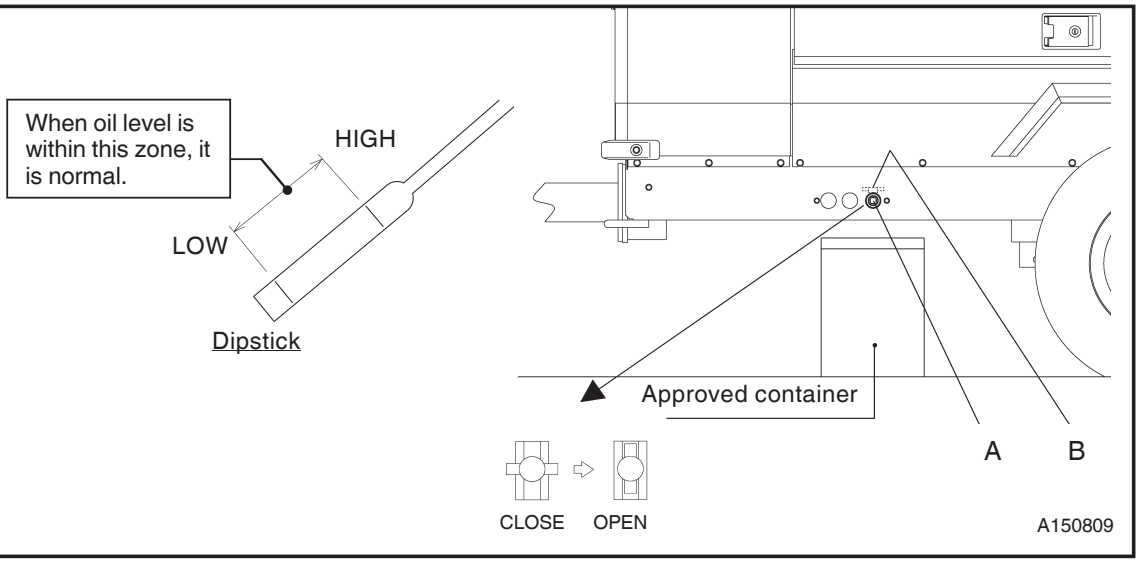

Caution in adding or draining engine oil

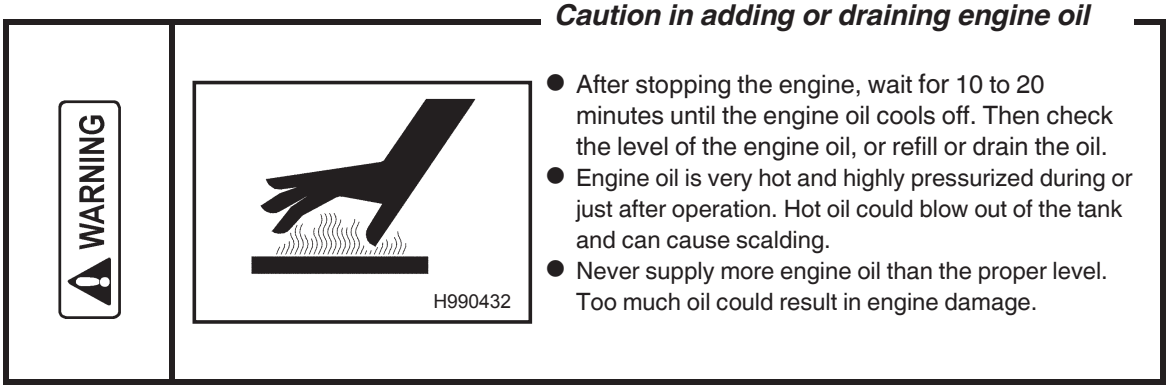

- After stopping the engine, wait for 10 to 20 minutes until the engine oil cools off. Then check the level of the engine oil, or refill or drain the oil.
- Engine oil is very hot and highly pressurized during or just after operation. Hot oil could blow out of the tank and can cause scalding.
- Never supply more engine oil than the proper level. Too much oil could result in engine damage.

Change engine oil filter element

At 50 hours for the first change and at every 500 hours thereafter

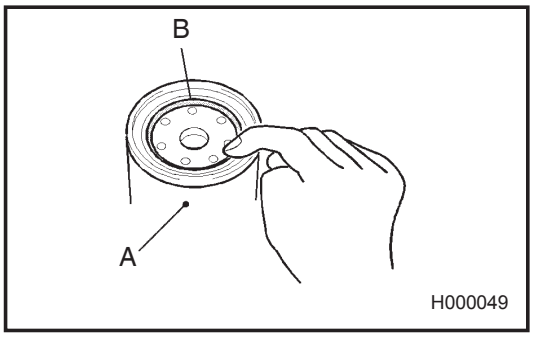

1. Remove the oil filter element [A], using a filter wrench.
2. Screw in the new oil filter element [A] with the gasket [B] coated slightly with oil.
   (For part number, See "Replacement Parts.")
3. After the gasket touches the oil pump, tighten another 1 time with a filter wrench.
4. After installing the oil filter element, check for any leak during operation.

Check battery electrolyte and specific gravity of battery electrolyte

Battery electrolyte: every 250 hours

Specific gravity of battery electrolyte: every 500 hours

- **Ordinary type battery:**

  Check battery electrolyte level. If not within the specified level, add distilled water.

  Measure specific gravity of battery electrolyte. If below 1.24, charge the battery.

  See "Battery Maintenance" for method of specific gravity measurement and recharging the battery.

- **Enclosed type battery:**

  Check the indicator on top surface of the battery.

  If the indicator shows that charge is needed, charge the battery.

If specific gravity of battery electrolyte does not rise in spite of replenishing distilled water or charging battery, the battery must be replaced.

Battery Maintenance

Battery may generate hydrogen gas and may explode. Charging should be done in a well-ventilated place.

- Do not check the battery by short-circuiting the positive and negative terminals.
- Never operate the machine or charge the battery with the battery electrolyte level low. This will cause deterioration of the battery plates, and could result in an explosion.
  Add distilled water until the electrolyte level is between the upper and lower level.
- Wear protective gloves and safety glasses when handling the battery.
  - If battery electrolyte contacts clothes or skin, immediately wash with plenty of water.
  - If battery electrolyte gets into your eyes, immediately wash it out with plenty of water and seek medical attention.

Handling battery

WARNING

D004

W010

TR0093

- Keep flames away from battery.
- Do not light a match or bring a lit cigarette near the battery.
- Do not charge a frozen battery. Otherwise it may explode.
  If the battery is frozen, warm it up until the battery temperature becomes 61°F to 86°F (16℃ to 30℃).
- Battery electrolyte is dilute sulfuric acid. Mishandling could cause severe burns.
- Dispose of battery observing local regulations.

[Charge battery]

- Use only a 12V battery charger designed for the type of battery being charged.
- Remove the battery from the machine before charging.
- Do not charge two batteries at the same time.
- Be sure not to connect (+) and (–) terminals backwards.

[How to use booster cables]

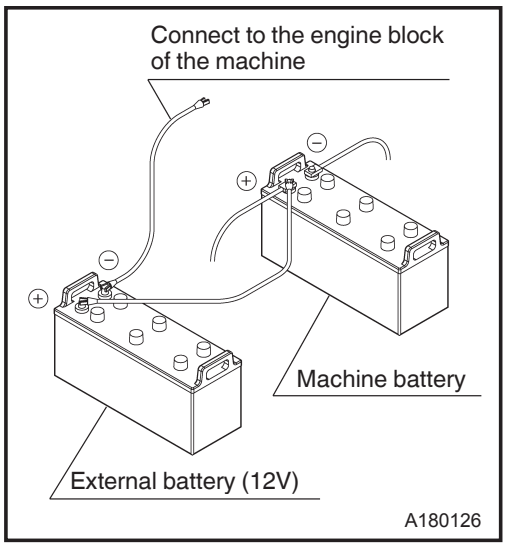

1. Stop the engine.
2. Connect one end of the (+) booster cable to the (+) terminal of the machine battery.
3. Connect the other end of the (+) booster cable to the (+) terminal of the external battery.
4. Connect one end of the (–) booster cable to the (–) terminal of the external battery.
5. Connect the other end of the (–) booster cable to the engine block of the machine.
6. Start the engine.
7. Disconnect the booster cables by following the procedure in the reverse order.

WARNING

- Do not connect (+) and (–) terminals backwards. Doing so could result in an explosion.

Check and clean air filter element

Every 250 hours

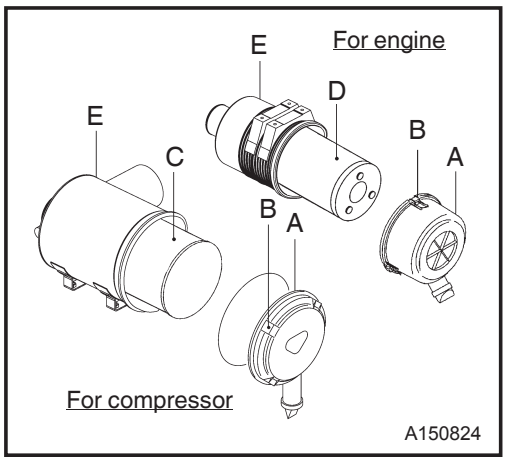

1. Loosen the cap latch [B] at the cap [A], then remove the cap and clean inside.
2. Remove and clean the element [C] & [D].
3. Clean the inside of the case [E].
4. Install the element.
5. Install the cap and fasten it with the cap latch.

- If the element is extremely dirty or worn, replace it with a new one. **(For part number, See “Replacement Parts.”)**

IMPORTANT

- A dirty or worn element could result in engine damage or shortened engine life. Be sure to regularly check and clean the element.

Change compressor oil

At 300 hours for the first change and at every 500 hours thereafter

- Compressor oil should be changed according to the interval called out in the Maintenance Chart. Under harsh operating conditions, it should be changed more often.
- Failure to change compressor oil according to the Maintenance Chart could result in a fire, or in damage to the compressor components.
- Change compressor oil only after the machine is shut down, the components have cooled, and the pressure in the separator receiver tank has dropped to zero (0).

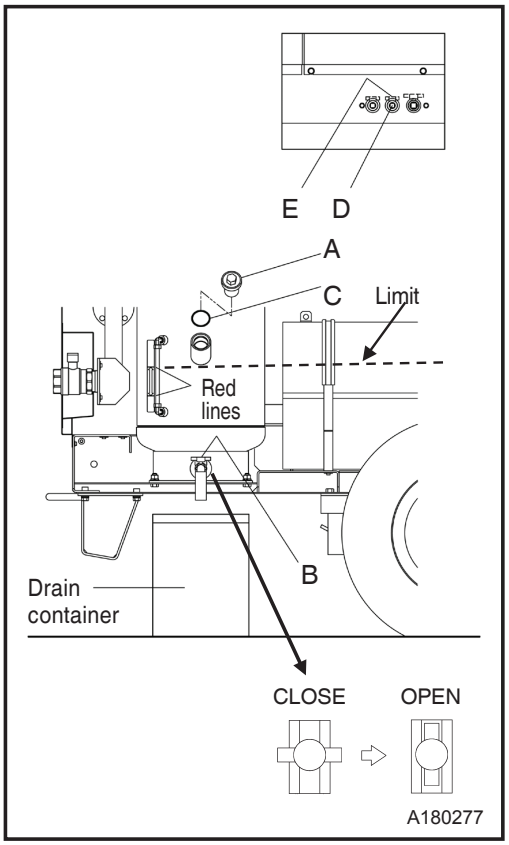

1. Remove the oil filler cap [A] and open the drain valve [B] to drain the residual oil.
2. Remove the oil cooler drain plug [D] and open the drain valve [E] to drain the oil accumulated in the cooler.
3. After draining compressor oil, tighten drain valves [B] and [E].
4. Fill the tank with new compressor oil up to the height indicated by the dotted line (Limit).
5. Inspect the O-ring [C] of the filler cap [A] for hardening or damage. Replace if needed. Then install the oil filler cap [A].
6. After starting operation, check and confirm that the oil level is between the red lines on the oil level gauge.
7. Repeat Steps 1 through 5 if the oil level is above or below the red lines.

Quantity of oil between the red lines	Approx.5L
Quantity of change oil	Approx.40L

IMPORTANT

- Avoid mixing different brands of compressor oil. Mixing different brands of compressor oil could cause an increase in viscosity and make compressor oil sticky, resulting in sticking of the compressor air-end. If compressor oil brands are mixed, the compressor air-end must be cleaned. Contact your dealer.
- Follow the designated regulations to dispose of compressor oil.

Change compressor oil filter element

At 300 hours for the first change and every 500 hours thereafter

Be sure to use genuine filter element.

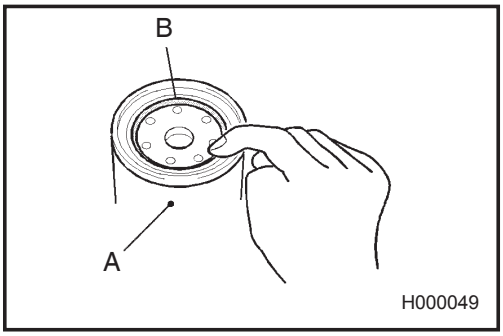

1. Remove the oil filter element [A], using a filter wrench.
2. Screw in the new oil filter element [A] with the gasket [B] coated slightly with oil.
   (For part number, See "Replacement Parts.")
3. After the gasket touches the oil pump, tighten another 1/2 to 3/4 turn with a filter wrench.
4. After installing the oil filter element, check for any leaks during operation.

IMPORTANT

- Poor quality oil filter elements do not trap dust sufficiently and will cause damage to the bearings. Be sure to use genuine parts.

Change air filter element

Every 500 hours

Be sure to use genuine air filter element.

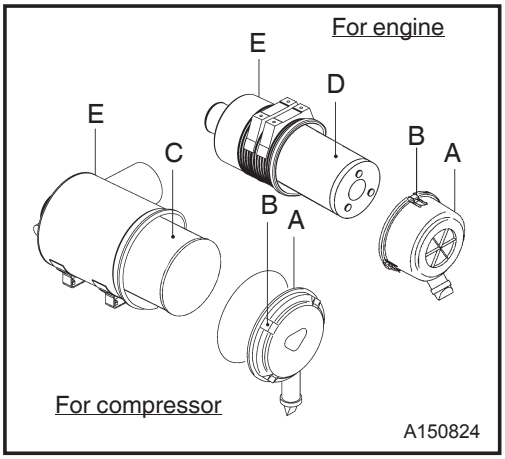

1. Loosen the cap latch [B] on the cap [A], then remove and clean the inside of the cap.
2. Remove the element [C] & [D] from the case [E], and replace the element with a new one. **(For part number, See "Replacement Parts.")**
3. Install the cap [A] onto the case [E] and fasten with the cap latch [B].

- Make sure to replace the element according to the interval called out in the Maintenance Chart. Under harsh operating conditions, replace more often.

IMPORTANT

- Be sure to use genuine parts.

Clean strainer in the scavenging orifice

Every 500 hours

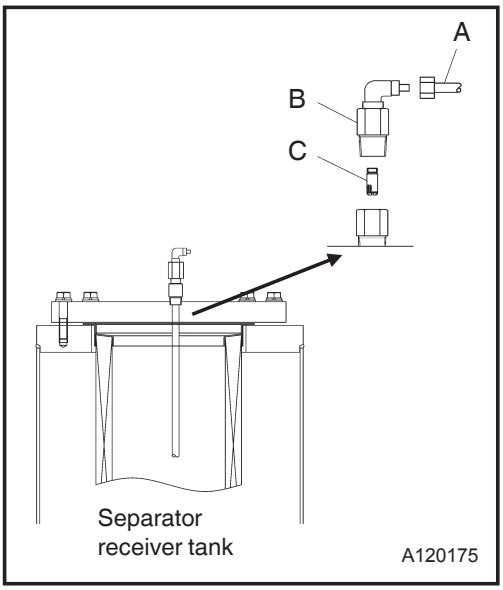

1. Remove the pipe [A] using a wrench.
2. Remove the bushing [B].
3. Remove the strainer [C]
4. Wash the removed strainer in diesel oil and blow out dust and debris with compressed air.
5. After cleaning, install the strainer again in the reverse procedure.

Change fuel filter and fuel pre-filter element

Every 500 hours

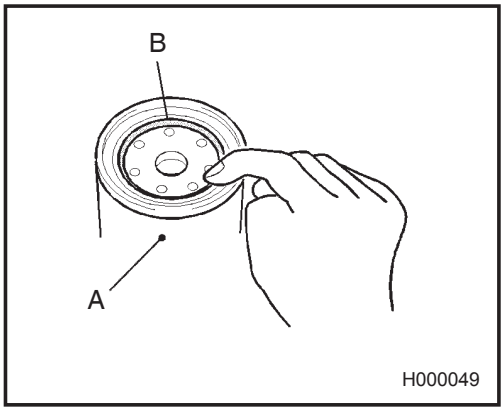

1. Remove the filter element [A] using a filter wrench.
2. Spread a thin film of fuel oil on the gasket [B] of the new filter and screw it in.
   (For part number, See "Replacement Parts.")
3. After the gasket touches the pump, tighten it 2/3 turn using a filter wrench.
4. Bleed the air from the fuel. **(See "Air Bleeding in Fuel Line.")**
5. After installing the fuel filter, be sure to check for leakage during operation.

- For additional information, refer to the engine operator's manual.

Clean element in sedimenter

Every 500 hours

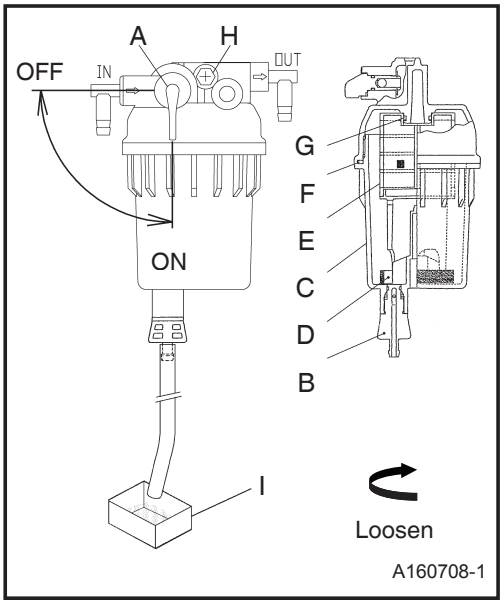

1. Turn the fuel selector valve [A] to the [OFF] position.
2. Loosen the drain valve [B] and drain out condensed water inside.
3. Turn the cup [C] to the left and remove it. Wipe out the inside of the cup.
4. Remove the float [D] inside the cup [C].
5. Wash the element [E] and the inside of the cup [C] with new fuel.
6. Inspect the element [E] and O-ring ([F] & [G]) for wear or damage. Replace if needed. **(For part number, See "Replacement Parts.")**
7. Assemble in the reverse procedure.

- If air remains in the fuel line, set the CONTROL POWER switch to position and release the air by loosening the bolt [H].
- Drain the condensate into a container [I], then dispose of the condensate according to the designated regulations.

Check for cracks and leaks on the exhaust pipe

Every 500 hours

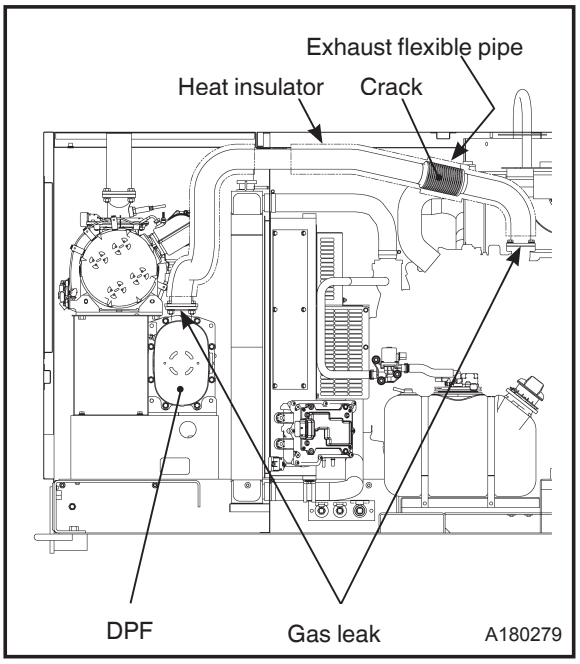

- Inspect the flexible pipes in the exhaust system for cracks or leaks etc.
- Remove any insulating material wrapped around pipes when performing inspection.
- If any leak is found, take care to avoid getting burned by exhaust gas.
- After finishing inspection, rewrap the insulation and tighten with with a clamp or belt.

Clean outside of radiator・oil cooler

Every 1,000 hours

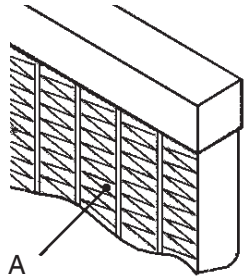

- Clean the cooling fin tubes [A] of the radiator, oil cooler, and after-cooler (after-cooler models) to remove dust and debris that could result in overheating.
- Do not use a high pressure washer. Doing so could result in damage to the cooling fin tubes.

Check and clean drain outlet port of after cooler (After-cooler models)

Every 1,000 hours

See “Draining After-Cooler” in “Operation.”

IMPORTANT

- If water is found mixed in compressed air, the silencer and air pipe could be clogged. Inspect and clean periodically.

Change breather filter element

Every 1,500 hours

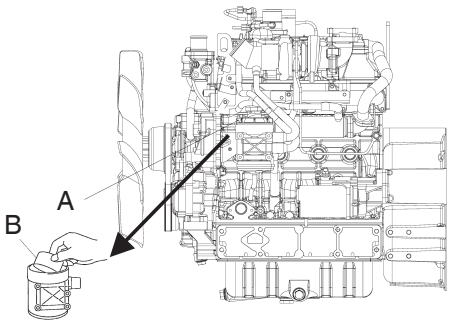

1. Remove cap [A] of breather filter, and remove element [B].
2. Install a new element [B] and firmly install the cap [A].
   (For part number, See “Replacement Parts.”)

Change coolant

1,000 hours or every 2 years

Before changing coolant, stop the machine and allow the coolant to cool.

1. Loosen the radiator cap slowly to relieve pressure.
2. Remove the radiator cap [A]. Then remove the drain plug [B] and open the drain valve [C] slowly.
3. Loosen the drain plug [D] on the engine body to drain.
4. Drain coolant from the reserve tank.
5. After draining, close the drain valve [C] and tighten the drain plug [D] on the engine body, then replenish coolant from inlet. (Make sure to replenish coolant in the reserve tank as well).
   [Coolant capacity : approx. 15.4L]
6. After changing the coolant, operate the machine for 5 minutes in an unloaded condition. Stop the machine and check the coolant level again. Add coolant if needed.

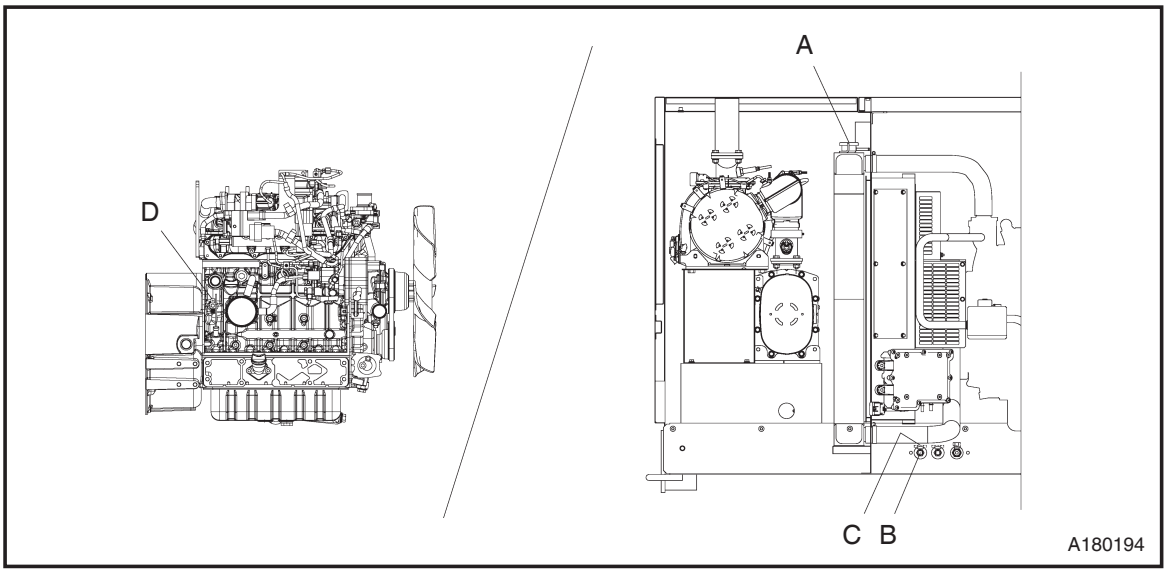

WARNING

- When removing the radiator cap, first loosen it to release the internal pressure. Once the pressure is fully released, then remove the cap. Hot coolant under pressure could result in death or serious injury.
- LLC (Antifreeze) is a toxic material.
- If LLC (Antifreeze) is swallowed, seek medical attention immediately.
- If LLC (Antifreeze) gets in eyes, immediately wash eyes with clean running water and seek medical attention.
- Store LLC (Antifreeze) in a securely sealed container with a label stating "LLC (Antifreeze) inside." Keep out of the reach of children.
- Keep away from fire or flame.

Change DEF pump filter

Every 3,000 hours

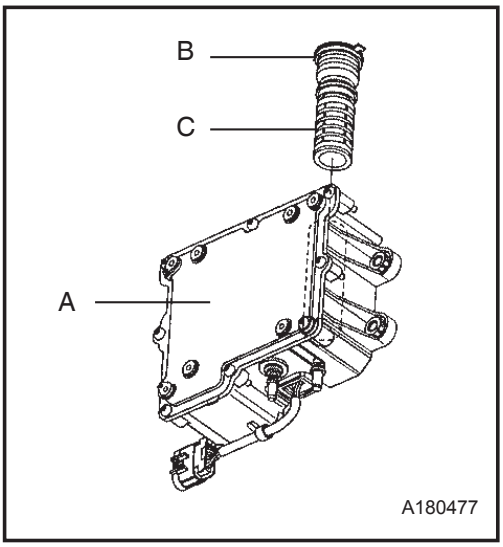

1. Set the CONTROL POWER switch to the position. Wait at least 2 minutes to make sure the supply module [A] has fully stopped.
2. Place an oil pan under the supply module, loosen the cover [B], and pull it out together with the filter [C].
3. Install a new filter [C].
   (For part number, See "Replacement Parts.")
4. Install the cover [B] and tighten.

IMPORTANT

- The DEF filter acts as an important step in filtering small particulate matter from the system. To ensure long life of the unit, use genuine replacement parts.

Check DEF hoses

Every 3,000 hours

Inspect hoses for cracks or DEF leaks. Check for any loose connections.

Performance check of pressure control valve

Every 6,000 hours

1. Make sure that the pressure gauge indicates between 51 to 73 PSI when opening the service valve during operation.
2. If the pressure is higher or lower than indicated above, contact your dealer.

Storage and Disposal

Preparation for Long-term Storage

If the machine will not be used for more than six (6) months:

1. If possible, store the machine in a garage, shed, or other clean, dry place. Avoid storing the machine outside, even under a cover, as rust or corrosion may result.
2. Change the engine oil, run the engine for a while to clean the inside of the engine, then drain the oil.
3. Drain the coolant and fuel from the machine.
4. Disconnect the cables from the battery. Remove the battery from the machine and store it in a dry place. (Charge the battery at least once every month.)
5. Seal the engine, air-intake port, muffler, and other openings with a vinyl sheet, packing tape, etc., to prevent moisture and dust from entering the machine.
6. Be sure to make any repairs, and continue to maintain the machine, so that it will be ready for operation.

Disposal of Product

- Before disposing of this machine, drain the coolant, oils, and fuel.
- For additional information or requirements regarding disposal, contact your dealer.

Specifications

Specifications

Model			MA400 T4F	MA400 T4F (After-cooler model)
COMPRESSOR	Type		Single-stage oil cooled, screw type compressor	
	Free air delivery	CFM (m^3/min)	400 (11.3)	
	Working pressure	PSI (MPa)	100 (0.69)	
	Engine speed(full load)	RPM	2,600	
	Engine speed(unload)	RPM	1,300	
	Lubricating system		Forced Lubrication by compressed pressure	
	Driving system		Direct driving with rubber coupling	
	Receiver tank capacity	m^3	0.077	
	Lubricating oil capacity	L	40	
ENGINE	Model		KUBOTA V3800TIEF4B-COHE-1	
	Type		4 Cycle, water cooled, direct injection, Turbocharged, EGR,DPF,SCR	
	Cylinder quantity-Cylinder diameter × Cylinder stroke	mm	4-100mm×120mm	
	Total displacement	L	3.769	
	Rated output (GROSS)	kW/min^{-1}	86.4 / 2,600	
	Rated output (NET)		77.9 / 2,600	
	Lubricating oil capacity	L	13	
	Coolant capacity (including radiator)	L	15.6	
	Battery		Equivalent to 130F51×1 (12 V)	
	Fuel tank capacity	L	178	
	DEF tank capacity	L	20	
DIMENSION・MASS	Overall length (only for bonnet)	mm	2,630	
	Overall width	mm	1,455	
	Overall height	mm	1,210	
	Net dry mass	kg	1,695	1,725
	Operating mass	kg	1,920	1,950

Model			MA375-DP T4F	MA375-DP T4F (After-cooler model)
COMPRESSOR	Type		Single-stage oil cooled, screw type compressor	
	Free air delivery	CFM (m^3/min)	300/375 (9.3)/(10.6)	
	Working pressure	PSI (MPa)	150/100 (1.03)/(0.69)	
	Engine speed(full load)	RPM	2,400/2,700	
	Engine speed(unload)	RPM	1,300	
	Lubricating system		Forced Lubrication by compressed pressure	
	Driving system		Direct driving with rubber coupling	
	Receiver tank capacity	m^3	0.077	
	Lubricating oil capacity	L	40	
ENGINE	Model		KUBOTA V3800TIEF4B-COHE-1	
	Type		4 Cycle, water cooled, direct injection, Turbocharged, EGR,DPF,SCR	
	Cylinder quantity-Cylinder diameter × Cylinder stroke	mm	4-100mm×120mm	
	Total displacement	L	3.769	
	Rated output (GROSS)	kW/min^{-1}	86.4 / 2,600	
	Rated output (NET)		77.9 / 2,600	
	Lubricating oil capacity	L	13	
	Coolant capacity (including radiator)	L	15.6	
	Battery		Equivalent to 130F51×1 (12 V)	
	Fuel tank capacity	L	178	
	DEF tank capacity	L	20	
DIMENSION・MASS	Overall length (only for bonnet)	mm	2,630	
	Overall width	mm	1,455	
	Overall height	mm	1,210	
	Net dry mass	kg	1,695	1,725
	Operating mass	kg	1,920	1,950

Outline drawing

MA400 T4F
MA375-DP T4F

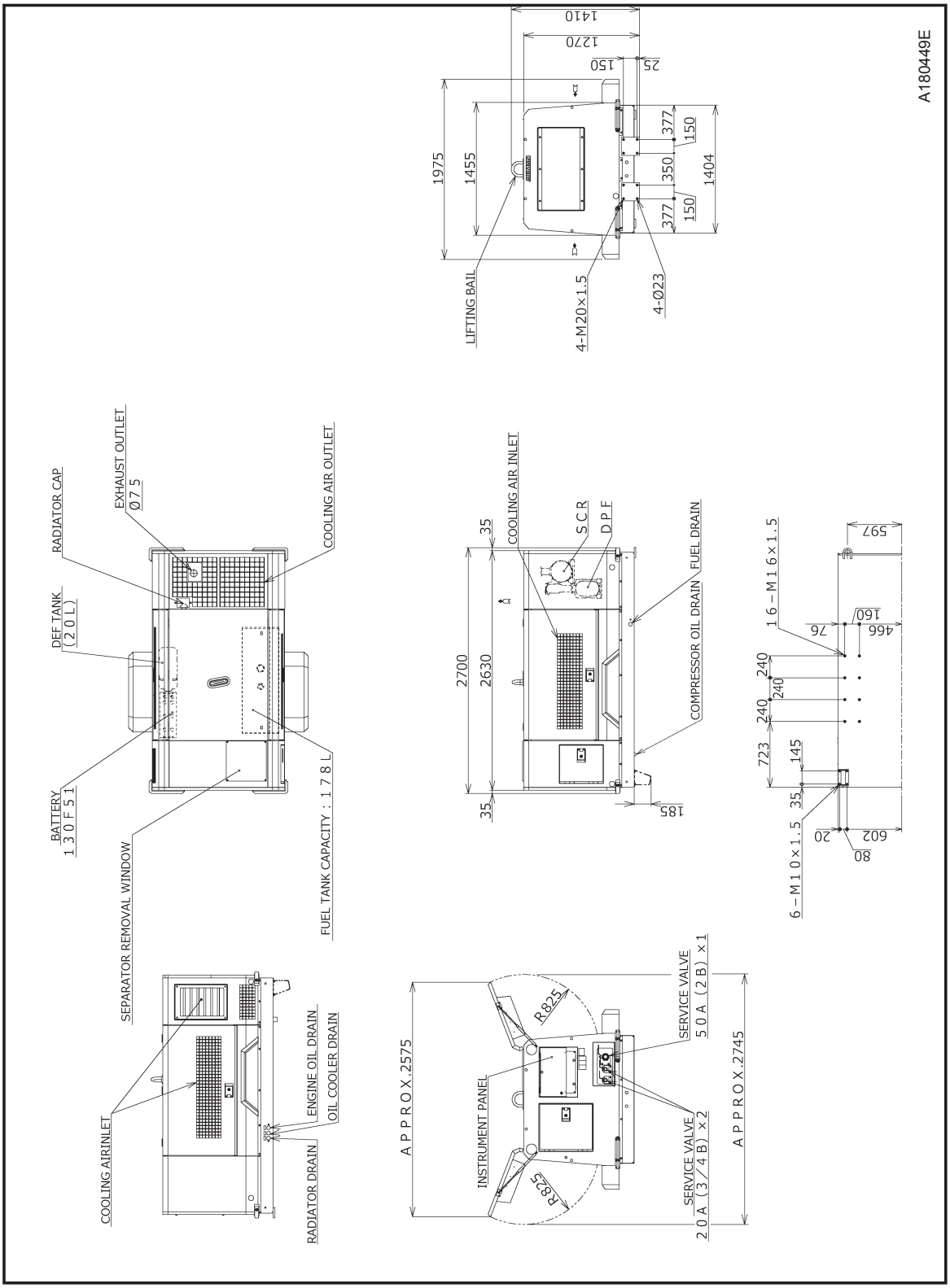

MA400 T4F (After-cooler model)

MA375-DP T4F (After-cooler model)

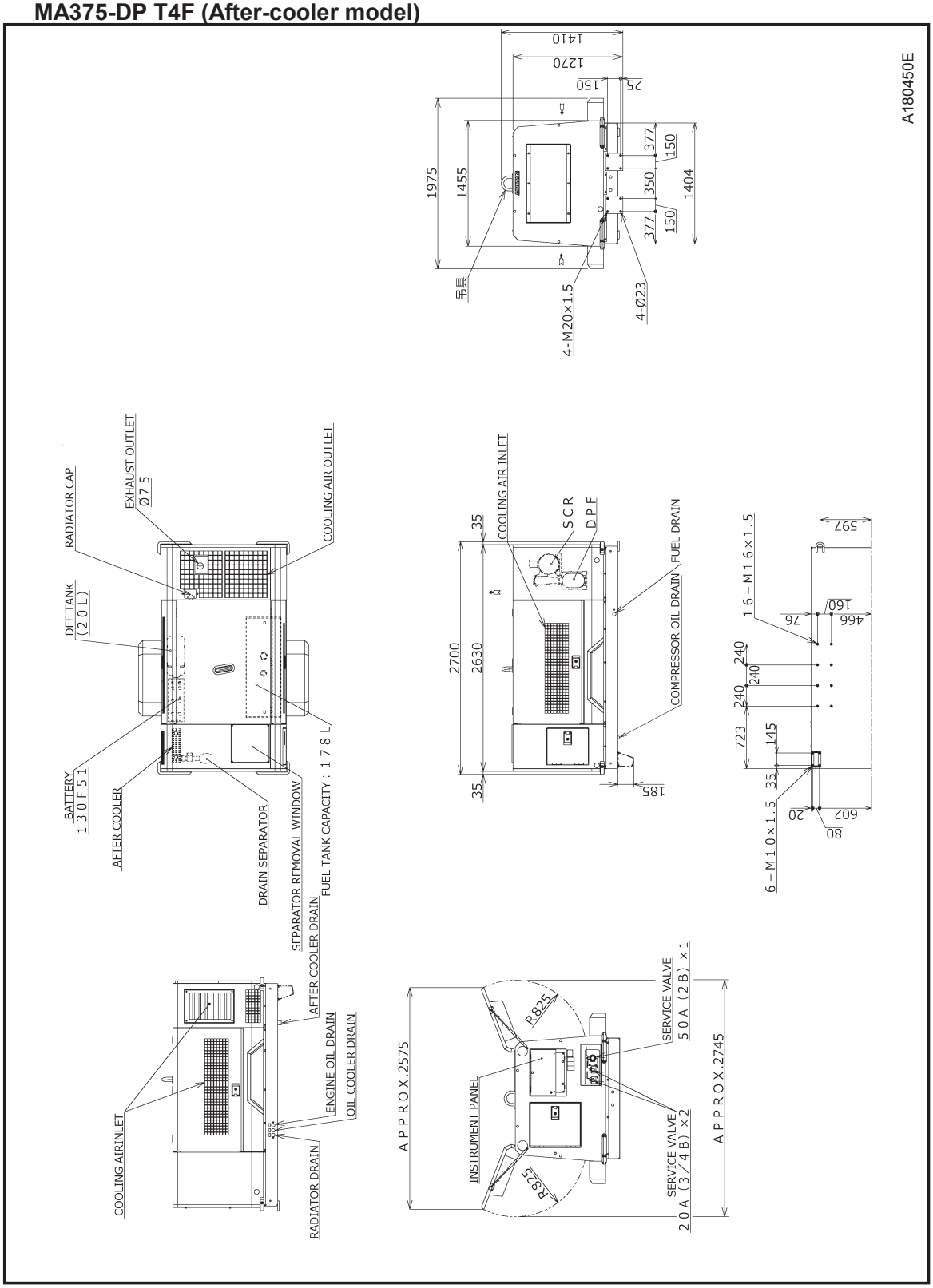

Piping Diagram

Compression air・Compressor oil

MA400 T4F

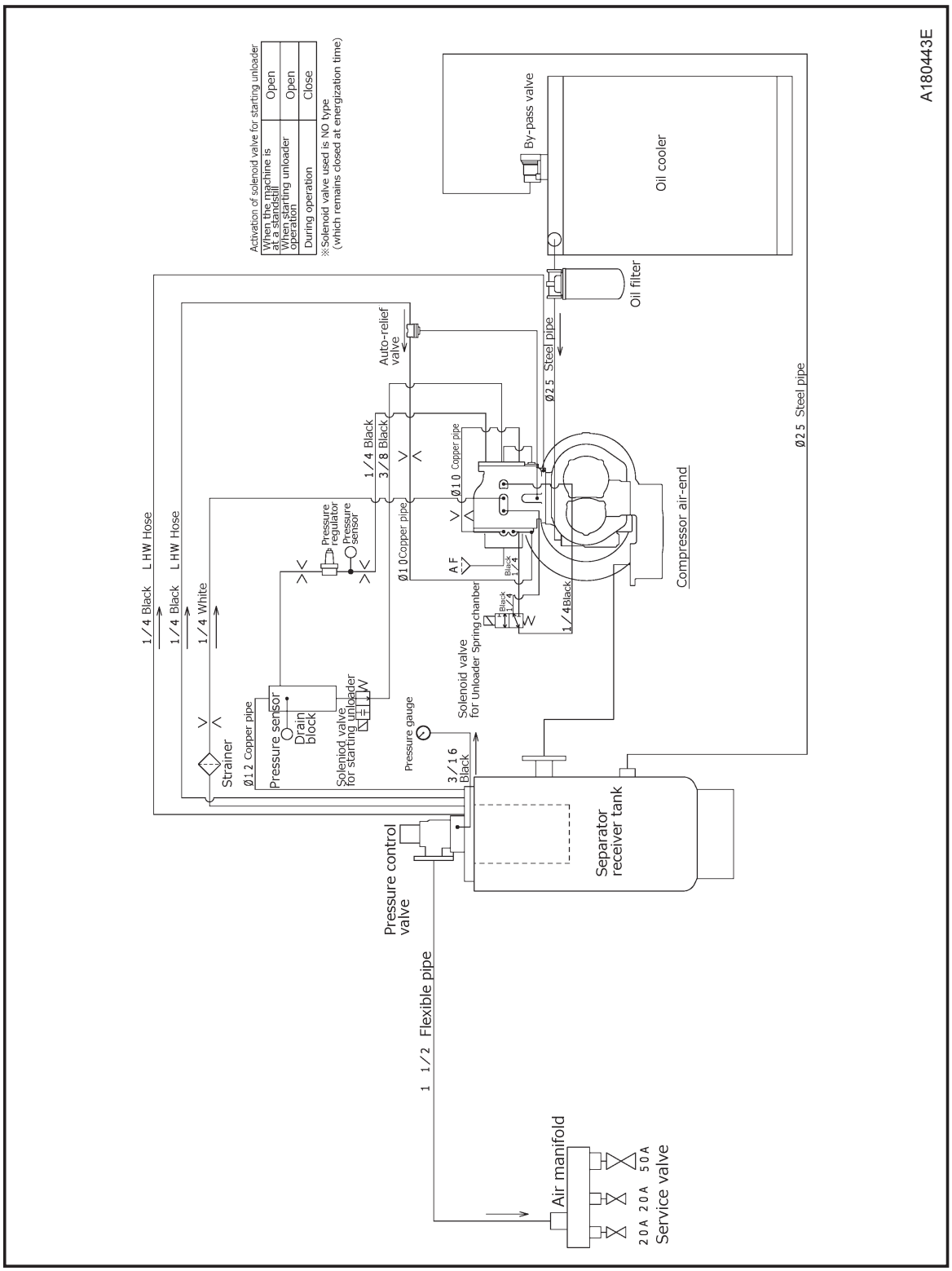

MA375-DP T4F

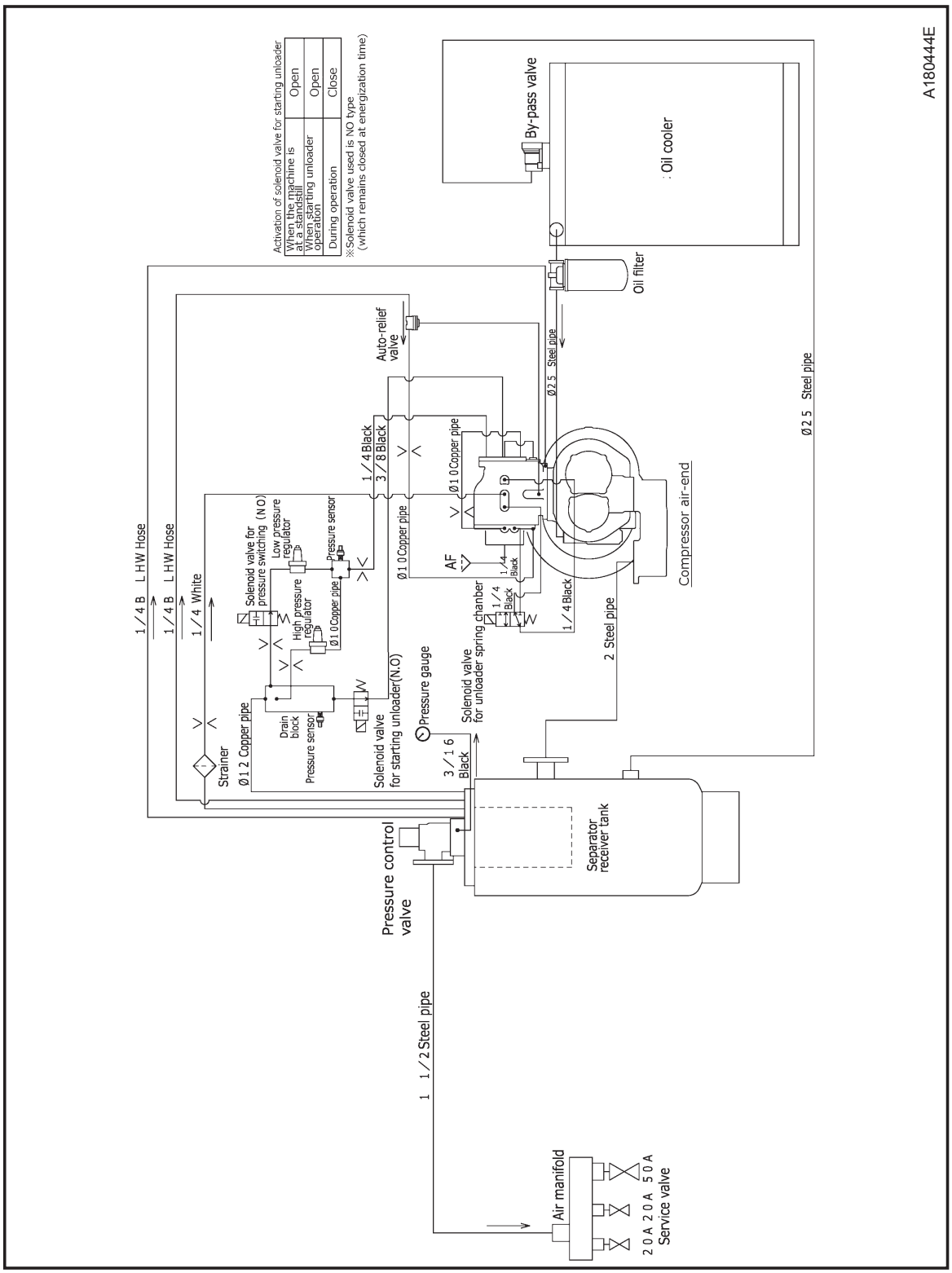
A180444E
Activation of solenoid valve for starting unloader
When the machine is at a standstill
Open
When starting unloader operation
Open
During operation
Close
※Solenoid valve used is NO type
(which remains closed at energization time)
By-pass valve
: Oil cooler
Oil filter
Ø2.5 Steel pipe
Ø2.5 Steel pipe
Auto-relief valve
1/4 Black
3/8 Black
Ø10 Copper pipe
Ø10 Copper pipe
AF
1/4 Black
1/4 Black
1/4 Black
Compressor air-end
2 Steel pipe
1/4 B L HW Hose
1/4 B L HW Hose
1/4 White
Solenoid valve for pressure switching (N.O)
Low pressure regulator
Pressure sensor
High pressure regulator
Ø10 Copper pipe
Solenoid valve for unloader spring chanber
Pressure gauge
Solenoid valve for starting unloader(N.O)
Drain block
Pressure sensor
Ø12 Copper pipe
Strainer
3/16 Black
Separator receiver tank
Pressure control valve
1 1/2 Steel pipe
Air manifold
20A 20A 50A
Service valve

MA400 T4F (After-cooler model)

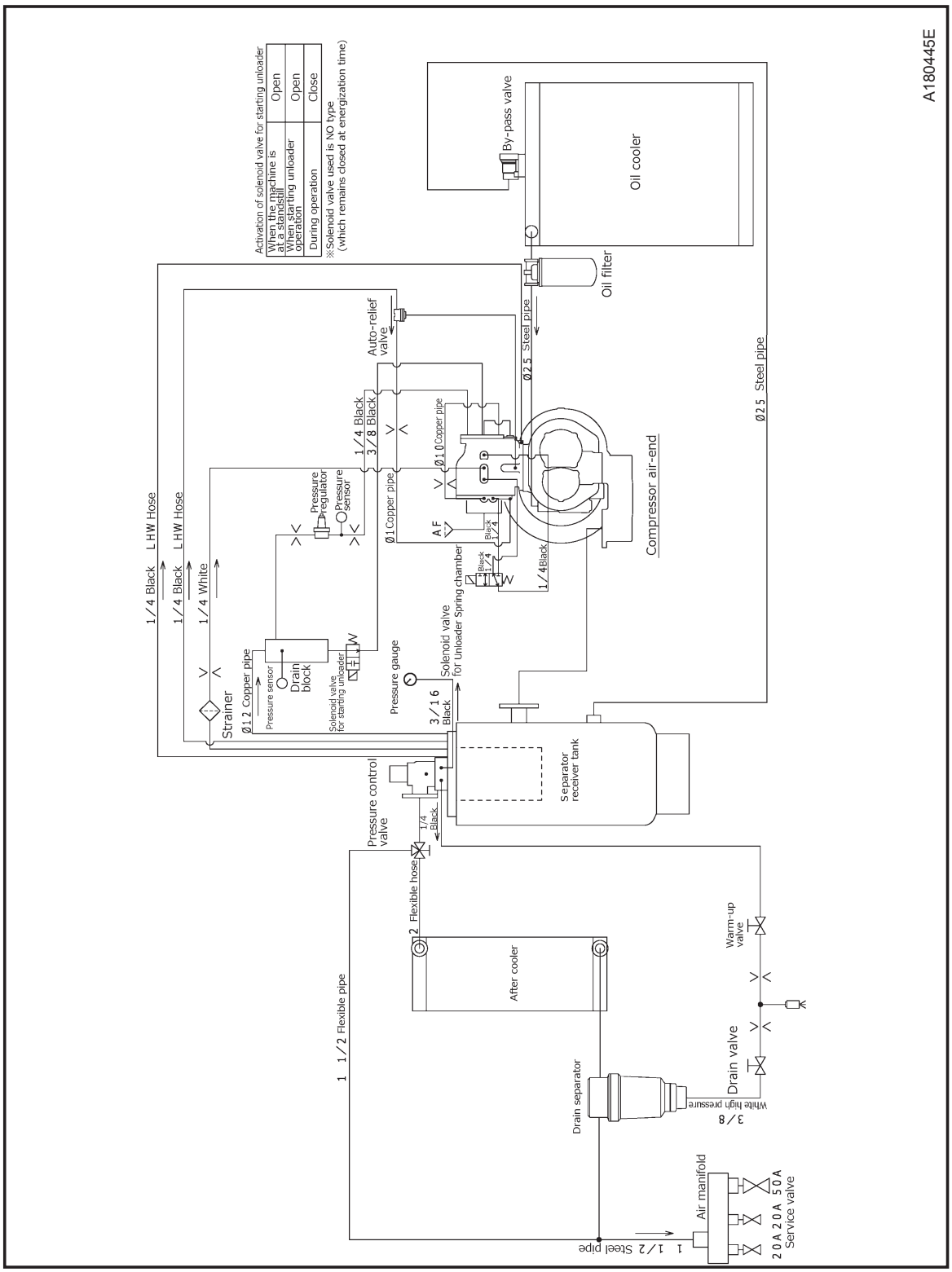

MA375-DP T4F (After-cooler model)

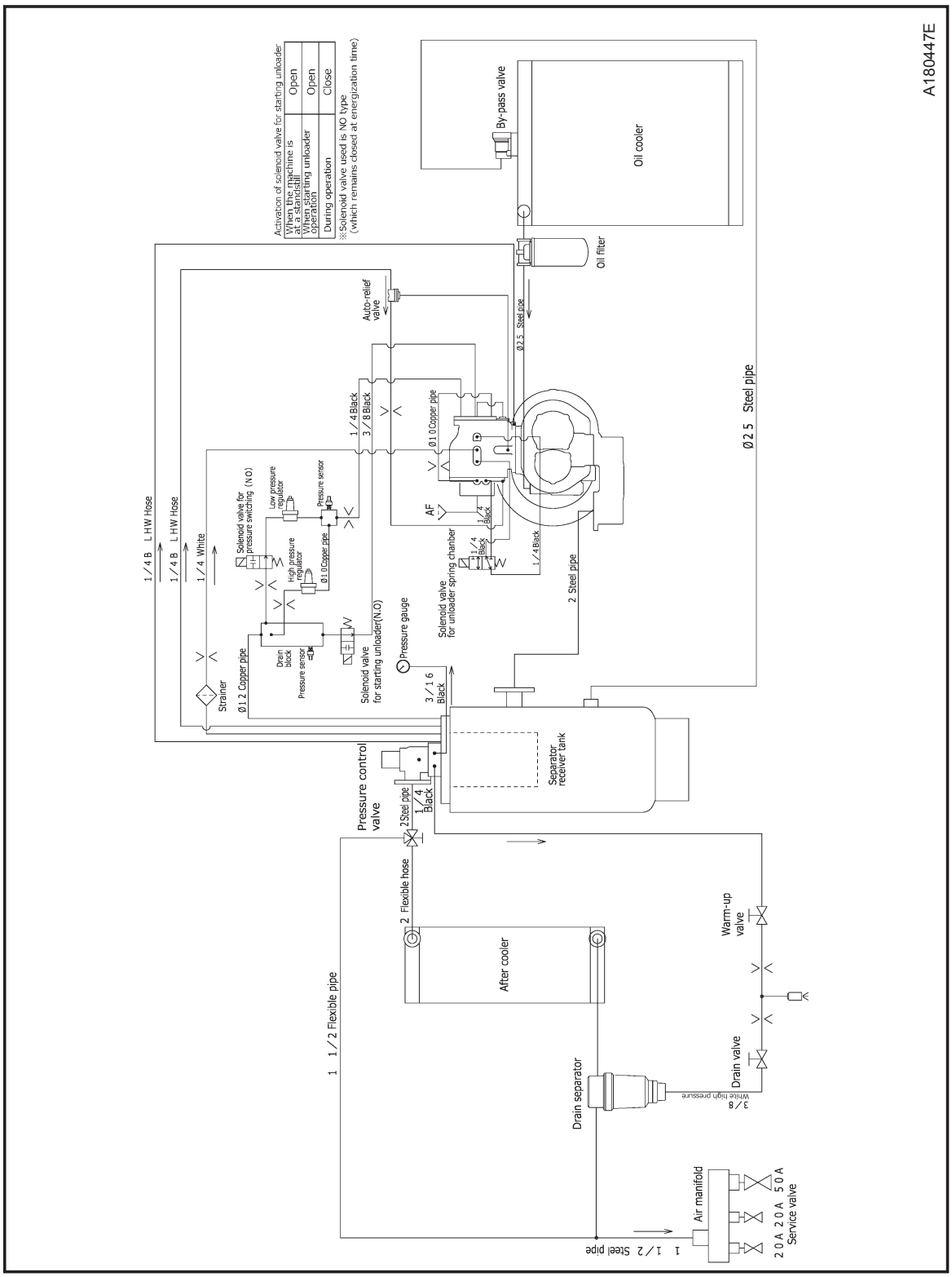

Fuel Piping

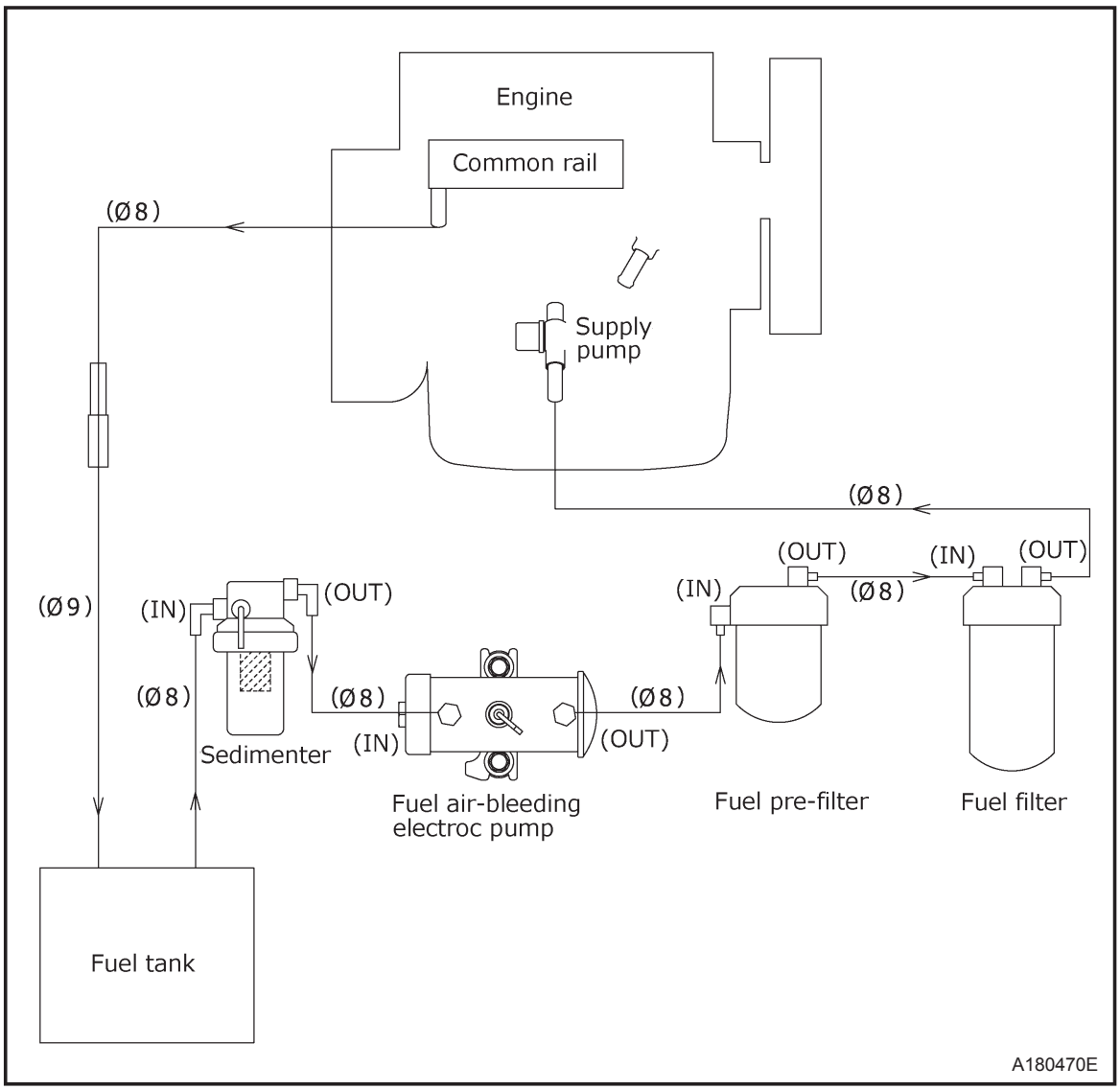
Engine
Common rail
(Ø8)
Supply pump
(Ø8)
(OUT)
(IN)
(OUT)
(Ø9)
(IN)
(OUT)
(IN)
(Ø8)
(Ø8)
(Ø8)
(Ø8)
(IN)
(OUT)
Sedimenter
Fuel air-bleeding electroc pump
Fuel pre-filter
Fuel filter
Fuel tank
A180470E

Wiring Diagram

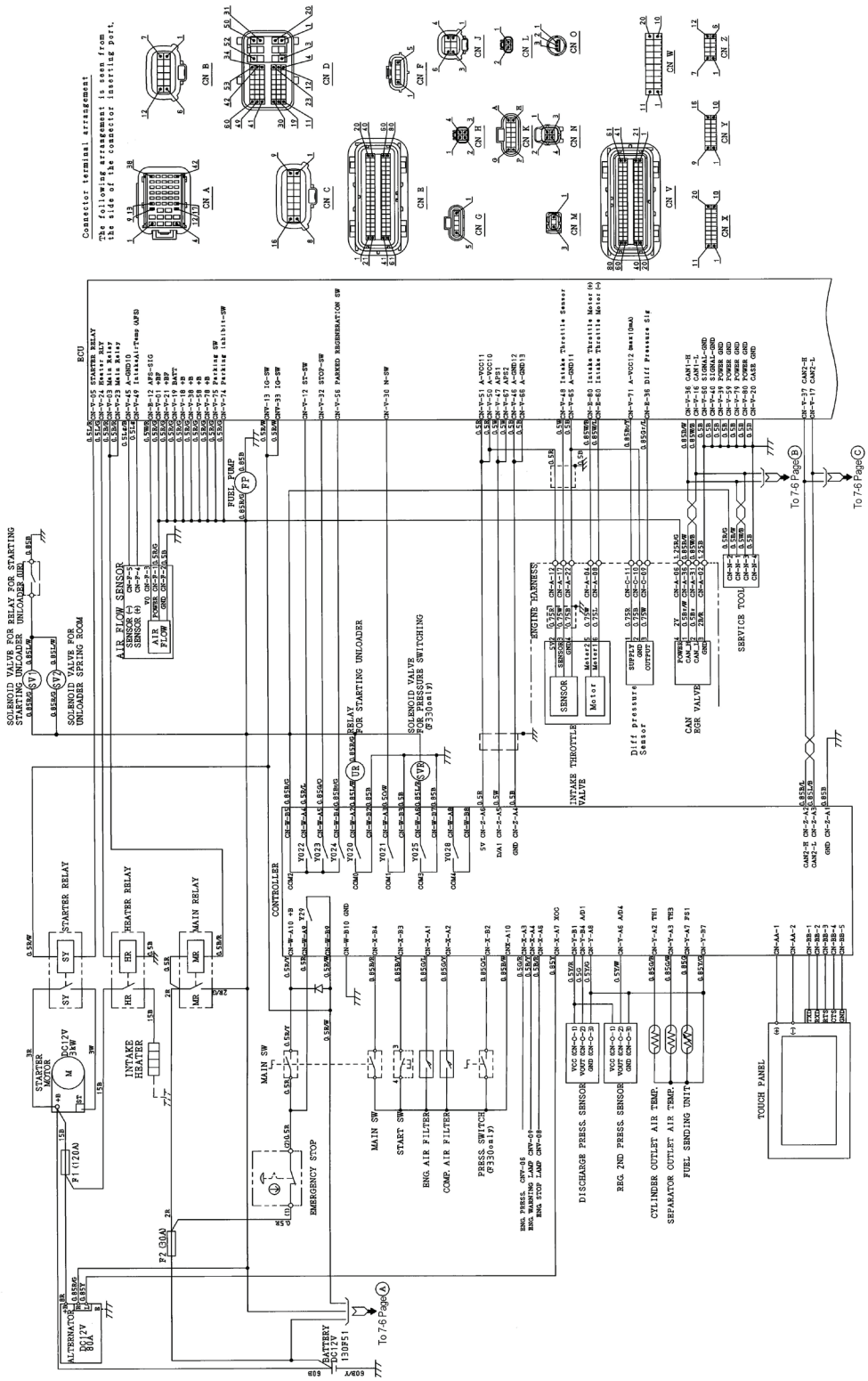

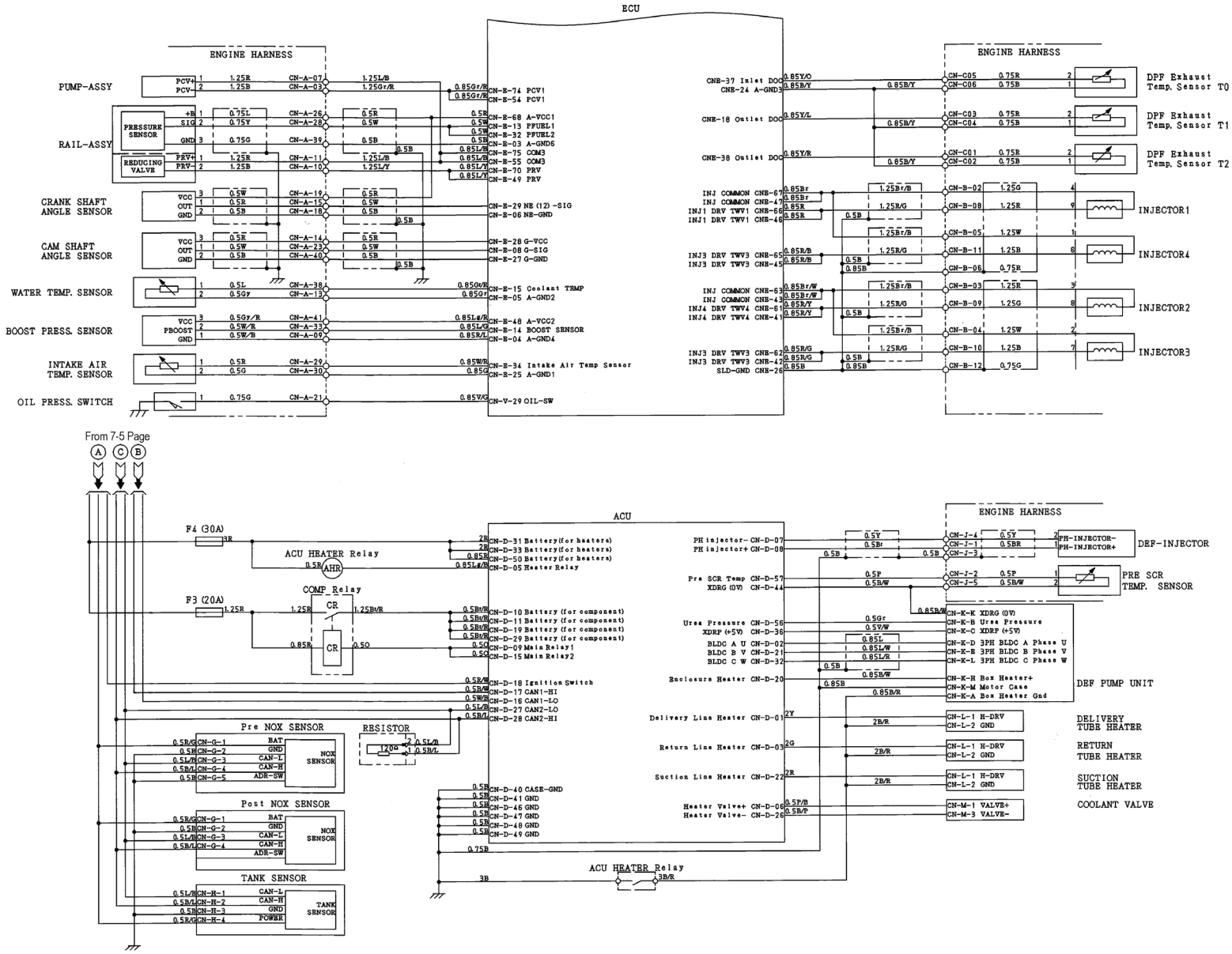
ECU
ENGINE HARNESS
PUMP-ASSY
PCV+
PCV-
RAIL-ASSY
PRESSURE SENSOR
REDUCING VALVE
CRANK SHAFT ANGLE SENSOR
CAM SHAFT ANGLE SENSOR
WATER TEMP. SENSOR
BOOST PRESS. SENSOR
INTAKE AIR TEMP. SENSOR
OIL PRESS. SWITCH
CN-E-74 PCV1
CN-E-54 PCV1
CN-E-68 A-VCC1
CN-E-13 PFUEL1
CN-E-32 PFUEL2
CN-E-03 A-GND5
CN-E-75 COM3
CN-E-55 COM3
CN-E-70 PRV
CN-E-49 PRV
CN-E-29 NE (12) -SIG
CN-E-06 NE-GND
CN-E-28 G-VCC
CN-E-08 G-SIG
CN-E-27 G-GND
CN-E-15 Coolant TEMP
CN-E-05 A-GND2
CN-E-48 A-VCC2
CN-E-14 BOOST SENSOR
CN-E-04 A-GND4
CN-E-34 Intake Air Temp Sensor
CN-E-25 A-GND1
CN-V-29 OIL-SW
CNE-37 Inlet DOC
CNE-24 A-GND3
CNE-18 Outlet DOC
CNE-38 Outlet DOC
DPF Exhaust Temp. Sensor T0
DPF Exhaust Temp. Sensor T1
DPF Exhaust Temp. Sensor T2
INJECTOR1
INJECTOR4
INJECTOR2
INJECTOR3
From 7-5 Page
ACU
F4 (30A)
ACU HEATER Relay
F3 (20A)
COMP Relay
CN-D-31 Battery(for heaters)
CN-D-33 Battery(for heaters)
CN-D-50 Battery(for heaters)
CN-D-05 Heater Relay
CN-D-10 Battery (for component)
CN-D-11 Battery (for component)
CN-D-19 Battery (for component)
CN-D-29 Battery (for component)
CN-D-09 Main Relay1
CN-D-15 Main Relay2
CN-D-18 Ignition Switch
CN-D-17 CAN1-HI
CN-D-16 CAN1-LO
CN-D-27 CAN2-LO
CN-D-28 CAN2-HI
Pre NOX SENSOR
Post NOX SENSOR
TANK SENSOR
RESISTOR
CN-D-40 CASE-GND
CN-D-41 GND
CN-D-46 GND
CN-D-47 GND
CN-D-48 GND
CN-D-49 GND
ACU HEATER Relay
PH injector- CN-D-07
PH injector+ CN-D-08
Pre SCR Temp CN-D-57
XDRG (0V) CN-D-44
Urea Pressure CN-D-56
XDRF (+5V) CN-D-36
BLDC A U CN-D-02
BLDC B V CN-D-21
BLDC C W CN-D-32
Enclosure Heater CN-D-20
Delivery Line Heater CN-D-01
Return Line Heater CN-D-03
Suction Line Heater CN-D-22
Heater Valve+ CN-D-06
Heater Valve- CN-D-26
DEF-INJECTOR
PRE SCR TEMP. SENSOR
DEF PUMP UNIT
DELIVERY TUBE HEATER
RETURN TUBE HEATER
SUCTION TUBE HEATER
COOLANT VALVE

OPERATION LOG

OPERATION DATE	OPERATION TIME		TOTAL OPERATION HOURS (h)	DISCHARGE AIR PRESS. [psi]	AMBIENT TEMP.(°F)	DISCHARGE AIR TEMP. (°F)	COOLANT TEMP.(°F)	RATED RPM (rpm,min^{-1})	ENG.OIL REPLACEMENT HOUR (h)	COMP.OIL SUPPLY(L)	REMARKS (INSPECTION/PART CHANGE HISTORY ETC.)
	START TIME	STOP TIME									
. .	:	:									
. .	:	:									
. .	:	:									
. .	:	:									
. .	:	:									
. .	:	:									
. .	:	:									
. .	:	:									
. .	:	:									
. .	:	:									
. .	:	:									
. .	:	:									
. .	:	:									
. .	:	:									
. .	:	:									
. .	:	:									
. .	:	:									
. .	:	:									
. .	:	:									
. .	:	:									
. .	:	:									
. .	:	:									

Noise Emission

This section pertains only to machines distributed within the United States.

⚠ WARNING

Tampering with Noise Control System Prohibited

Federal law prohibits the following acts or the causing thereof:

1. The removal or rendering inoperative by any persons, other than for purposes of maintenance, repair, or replacement, of any device or element of design incorporated into any new compressor for the purpose of noise control prior to its sale or delivery to the ultimate purchaser or while it is in use; or
2. the use of the compressor after such device or element of design has been removed or rendered inoperative by any person.

Among those acts included in the prohibition against tampering are these:

3. Removal or rendering inoperative any of the following:
   a.the engine exhaust system or parts thereof
   b.the air intake system or parts thereof
   c.enclosure or parts thereof
4. Removal of any of the following:
   a.fan shroud
   b.vibration mounts
   c.sound absorption material
5. Operation of the compressor with any of the enclosure doors open.

Compressor Noise Emission Control Information

A. The removal or rendering inoperative, other than for the purpose of maintenance, repair, or replacement of any noise control device or element of design incorporated into this compressor in compliance with noise control act;
B. The use of this compressor after such device or element of design has been removed or rendered inoperative.

NOTE: The above information applies only to units that are built in compliance with the U.S. Environmental Protection Agency.

The Manufacturer reserves the right to make changes or add improvements without notice and without incurring any obligation to make such changes or add such improvements to products sold previously.

The Purchaser is urged to include the above provisions in any agreement for any resale of this compressor.

Noise Emission Control Maintenance Log

COMPRESSOR MODEL _____	
SERIAL NO. _____	
USER UNIT NO. _____	

UNIT IDENTIFICATION	**DEALER OR DISTRIBUTOR FROM WHOM PURCHASED:**
Engine Make & Model: _____	_____
Serial No.: _____	_____
Purchaser or Owner: _____	_____
Address: _____	Date Purchased: _____

The Noise Control Act of 1972 (86 Stat. 1234) prohibits tampering with the noise control system of any compressor manufactured and sold under the above regulations, specifically the following acts or the causing thereof:

(1) the removal or rendering inoperative by any persons, other than for purposes of maintenance, repair, or replacement, of any device or element of design incorporated into new compressor for the purpose of noise control prior to its sale or delivery to the ultimate purchaser or while it is in use; or (2) the use of the compressor after such device or element of design has been removed or rendered inoperative by any person.

Noise Emission Warranty

The manufacturer warrants to the ultimate purchaser and each subsequent purchaser that this air compressor was designed, built and equipped to conform at the time of sale to the first retail purchaser, with all applicable U.S. EPA Noise Control Regulations.

This warranty is not limited to any particular part, component, or system of the air compressor. Defects in the design, assembly or in any part, component, or system of the compressor which, at the time of sale to the first retail purchaser, caused noise emissions to exceed Federal Standards are covered by this warranty for the life of the air compressor.

Introduction

The unit for which this Maintenance Log is provided conforms to U.S. E.P.A. Regulations for Noise Emissions, applicable to Portable Air Compressors.

The purpose of this book is to provide (1) the Maintenance Performance Schedule for all required noise emission controls and (2) space so that the purchaser or owner can record what maintenance was done, by whom, where and when. The Maintenance Schedule and detailed instructions on the maintenance items are given on following page.

Maintenance Schedule

Item	Area	Period
A.	Compressed Air Leaks	As Detected
B.	Safety and Control Systems	As Detected
C.	Acoustic Materials	Daily
D.	Fasteners	100 hours
E.	Enclosure Panels	100 hours
F.	Air Intake & Engine Exhaust	100 hours
G.	Cooling Systems	250 hours
H.	Isolation Mounts	250 hours
I.	Engine Operation	See Operator's Manual
J.	Fuels & Lubricants	See Operator's Manual

A. Compressed Air Leaks

Correct all compressed air leaks during the first shutdown period after discovery. If severe enough to cause serious noise problems and efficiency loss, shut down immediately and correct the leak(s).

B. Safety and Control Systems

Repair or replace all safety and control systems or circuits as malfunction occurs. No compressor should be operated with either system bypassed, disabled, or nonfunctional.

C. Acoustic Materials

In daily inspections, observe these materials. Maintain all acoustic material as nearly as possible in its original condition. Repair or replace all sections that have: 1) sustained damage, 2) have partially separated from panels to which they were attached, 3) are missing, or have otherwise deteriorated due to severe operating or storage conditions.

D. Fasteners

All fasteners such as hinges, nuts, bolts, clamps, screws, rivets, and latches should be inspected for looseness after each 100 hours of operation. They should be retightened, repaired, or if missing, replaced immediately to prevent subsequent damage and noise emission increase.

E. Enclosure Panels

Enclosure panels should also be inspected at 100 hour operational intervals. All panels that are warped, punctured, torn, or otherwise deformed, such that their noise containment function is reduced, should be repaired or replaced before the next operation interval. Doors, access panels, and hatch closures especially, should be checked and adjusted at this time to insure continuous seating between gasket or acoustic material and the mating frame.

F. Air Intake and Engine Exhaust

Engine and compressor air intake and engine exhaust systems should be inspected after each 100 hours of operation for loose, damaged, or deteriorated components. Repairs or replacements should be made before the next period of use.

G. Cooling Systems

All components of the cooling system for engine water and compressor oil should be inspected every 250 hours of use. Any discrepancies found should be corrected before placing the unit back in operation. Unrestricted airflow over the radiator and oil cooler must be maintained at all times during operation.

H. Isolation Mounts

Engine/airend isolation mounts should be inspected after each 250 hours of operation. Those mounts with cracks or splits in the molded rubber, or with bent or broken bolts due to operation or storage in severe environments, all should be replaced with equivalent parts.

I. Engine Operation

Inspect and maintain engine condition and operation as recommended in the manuals supplied by the engine manufacturer.

J. Fuels and Lubricants

Use only the types and grades of fuels and lubricants recommended in the Equipment and Engine Manufacturer's Operator and Maintenance Manuals.

Maintenance Record For Noise Emission Control					
Item No.	Description Of Work	Hourmeter Reading	Maint / Inspect Date	Location City / State	Work Done By (Name)

Addendum A - Unit Options

Block Heater

The optional block heater keeps the engine block heated while the unit is stored or not in use.

The block heater should be used whenever the unit is stored or not in use in temperatures below 32° F (0° C).

1. Plug the cord of the block heater into the female end of a heavy-duty power cord (not supplied).
2. Plug the male end of the power cord into a standard 120V outlet.
3. Unplug the block heater before putting the unit into operation.

Battery Charger

The optional battery charger keeps the battery charged while the unit is stored or not in use.

1. Plug the cord of the battery charger into the female end of a heavy-duty power cord (not supplied).
2. Plug the male end of the power cord into a standard 120V outlet.
3. The red light (**A**) on the battery charger module indicates the battery is charging. The green light (**B**) indicates full charge. (The battery charger can stay plugged in after the battery reaches full charge without damaging the battery.)
4. Unplug the battery charger before putting the unit into operation.